Instruction Book
SKYLINE S5

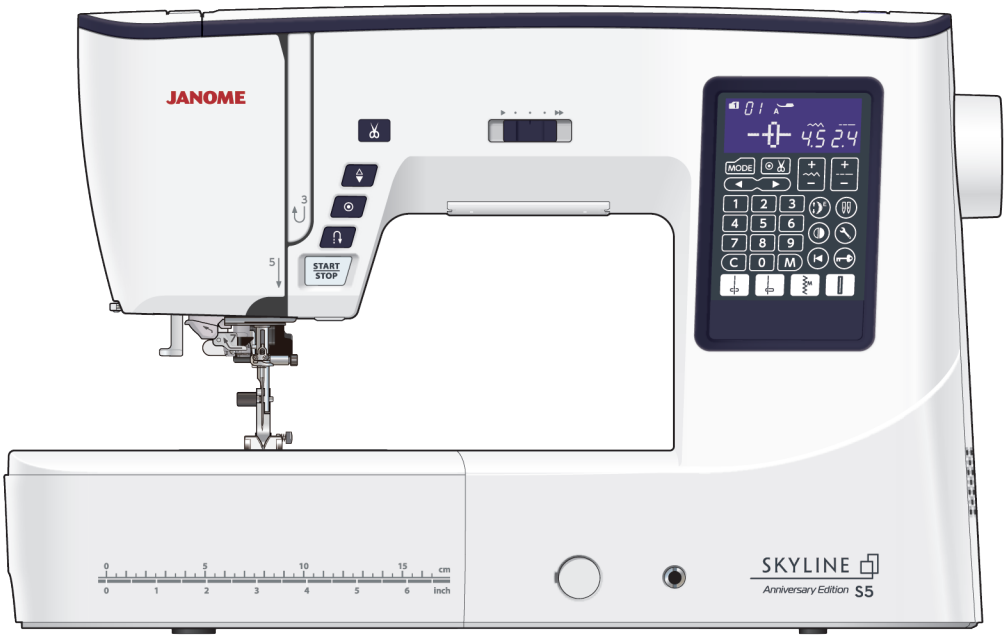

IMPORTANT SAFETY INSTRUCTIONS

When using an electrical appliance, basic safety precautions should always be followed, including the following:

This sewing machine is designed and manufactured for household use only.

Read all instructions before using this sewing machine.

DANGER— To reduce the risk of electric shock:

1. An appliance should never be left unattended when plugged in. Always unplug this sewing machine from the electric outlet immediately after using and before cleaning.

WARNING— To reduce the risk of burns, fire, electric shock, or injury to persons:

1. Do not allow to be used as a toy. Close attention is necessary when this sewing machine is used by or near children.
2. Use this appliance only for its intended use as described in this owner's manual. Use only attachments recommended by the manufacturer as contained in this owner's manual.
3. Never operate this sewing machine if it has a damaged cord or plug, if it is not working properly, if it has been dropped or damaged, or dropped into water. Return this sewing machine to the nearest authorized dealer or service center for examination, repair, electrical or mechanical adjustment.
4. Never operate the appliance with any air opening blocked. Keep ventilation openings of this sewing machine and foot controller free from accumulation of lint, dust and loose cloth.
5. Never drop or insert any object into any opening.
6. Do not use outdoors.
7. Do not operate where aerosol (spray) products are being used or where oxygen is being administered.
8. To disconnect, turn all controls to the off ("O") position, then remove plug from outlet.
9. Do not unplug by pulling on cord. To unplug, grasp the plug, not the cord.
10. Keep fingers away from all moving parts. Special care is required around the sewing machine needle and/or cutting blade.
11. Always use the proper needle plate. The wrong plate can cause the needle to break.
12. Do not use bent needles.
13. Do not pull or push fabric while stitching. It may deflect the needle causing it to break.
14. Switch this sewing machine off ("O") when making any adjustment in the needle area, such as threading the needle, changing the needle, threading the bobbin or changing the presser foot, and the like.
15. Always unplug this sewing machine from the electrical outlet when removing covers, lubricating, or when making any other adjustments mentioned in this owner's manual.

SAVE THESE INSTRUCTIONS

For Europe only:
This appliance can be used by children aged from 8 years and above and persons with reduced physical, sensory or mental capabilities or lack of experience and knowledge if they have been given supervision or instruction concerning use of the appliance in a safe way and understand the hazards involved. Children shall not play with the appliance. Cleaning and user maintenance shall not be made by children without supervision.

For outside Europe (except U.S.A.):
This appliance is not intended for use by persons (including children) with reduced physical, sensory or mental capabilities, or lack of experience and knowledge, unless they have been given supervision or instruction concerning use of the appliance by a person responsible for their safety. Children should be supervised to ensure that they do not play with the appliance.



Please note that on disposal, this product must be safely recycled in accordance with relevant National legislation relating to electrical/electronic products. If in doubt please contact your retailer for guidance. (EEA (European Economic Area) and UK)

TABLE OF CONTENTS

ESSENTIAL PARTS

Names of Parts....3
Standard Accessories....4
Guide Sticker for Threading....5
Accessory Storage....6
Extension Table....6
Free-arm sewing....6

GETTING READY TO SEW

Connecting the Power Supply....7
Operating Instructions:....7
Before Using Your Sewing Machine....7
Machine Operating Buttons....8
Controlling Sewing Speed....9
Foot Control....9
Function Keys....10
Raising and Lowering the Presser Foot....11
Knee Lifter....11
Adjusting the Foot Pressure....12
Dropping the Feed Dogs....12
Balancing Thread Tension....13
Lockout Key....14
Replacing the Presser Foot....14
Removing and Attaching the Foot Holder....15
Replacing the Needle Plate....16
Changing Needles....17
Fabric and Needle Chart....17
Winding the Bobbin....18
Threading the Machine....21
Built-in Needle Threader....22
Drawing Up the Bobbin Thread....23
Selecting the Patterns....24
Customizing Machine Settings....25

BASIC SEWING

Straight Stitch....29
Securing Seams....29
Sewing from the Edge of Thick Fabric....29
Changing Sewing Direction....29
Cutting Threads....30
Needle Plate Guides....30
Cornering Guide....30
Adjusting the Needle Drop Position....31
Adjusting the Stitch Length....31
Straight stitch needle plate....32
Lock-a-Matic Stitch....32
Locking Stitch....32
Straight Stitch with Left Needle Position....33
Triple Stretch Stitch....33
Knit Stitch....33
Sewing with Even Feed Foot (Walking Foot)....34
Zipper Sewing....35
Rolled Hem....38
Gathering....39
Pintucking....39
Zigzag Stitch....40
Multiple Zigzag Stitch (Tricot Stitch)....41
Overcasting Stitch....41
Knit Stitch....42
Double Overcasting Stitch....42
Blind Hemming....43
Shell Tuck....45
Buttonholes....45
Square Buttonhole....46
Using the Stabilizer Plate....50
Round End and Fine Fabric Buttonholes....51
Keyhole Buttonholes....51
Stretch Buttonholes....51
Corded Buttonhole....52
Welted Buttonhole....53
Button Sewing....55
Darning....56
Tacking....58
Eyelet....59

DECORATIVE STITCHING

Applique....60
Fringing....61
Drawn Work....61
Smocking....62
Fagoting....63
Scallop....63
French Knots....63
Patchwork Piecing....64
Patchwork....64
Quilting....65
Stippling....66
Clasp Stitches....66
Free Motion Quilting....66
Hand-look Quilt Stitches....67
Satin Stitches....67
Elongation ratio....67
Twin Needle Sewing....68

PROGRAMMING A PATTERN COMBINATION

Pattern Combination....70
Programming Auto-lock Stitch....71
Programming Automatic Thread Cutting....72
Pattern Combination with a Mirror Image....73
Resuming a Pattern from the Beginning....74
Resuming a Pattern Combination from the Beginning....74
Bridge Stitches....75
Monogramming....77
Editing a Pattern Combination....79
Deleting and Inserting a Pattern....80
Duplicating a Pattern....80
Uniform Stitch Adjustment....81
Unified Needle Drop Position....81
Individual Stitch Adjustment....82
Correcting Distorted Stitch Patterns....83

CARE AND MAINTENANCE

Cleaning the Hook Area....84
Cleaning the Inside of the Thread Guide....85
Problems and Warning Signals....86
Troubleshooting....88
Stitch Chart....89

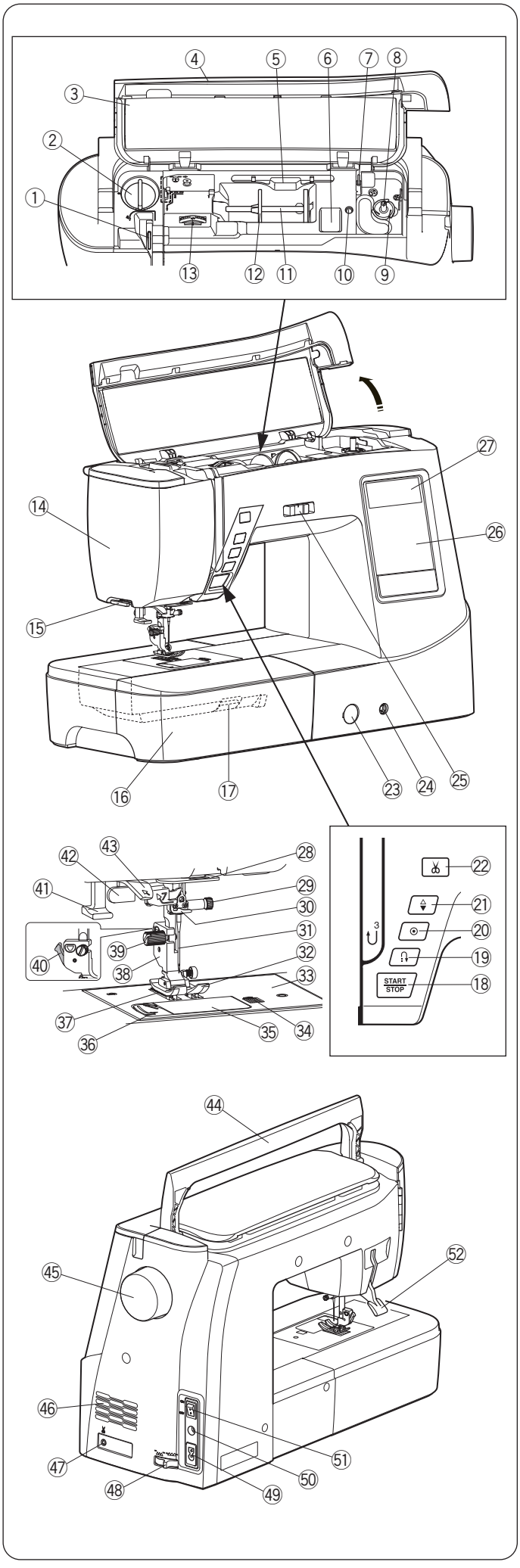

ESSENTIAL PARTS

Names of Parts

① Thread take-up lever
② Foot pressure dial
③ Reference chart
④ Top cover
⑤ Touch panel stylus holder
⑥ Foot storage compartment
⑦ Bobbin thread cutter B
⑧ Bobbin winder spindle
⑨ Bobbin thread cutter A
⑩ Hole for extra spool pin
⑪ Spool pin
⑫ Spool holder (large)
⑬ Thread tension dial
⑭ Face cover
⑮ Thread cutter
⑯ Extension table (accessory storage)
⑰ Needle plate release lever
⑱ Start/stop button
⑲ Reverse button
⑳ Auto-lock button
㉑ Needle up/down button
㉒ Thread cutter button
㉓ Feed balancing dial
㉔ Knee lifter socket
㉕ Speed control slider
㉖ Touch panel (function keys)
㉗ LCD screen
㉘ Lower thread guide
㉙ Needle clamp screw
㉚ Needle bar thread guide
㉛ Needle
㉜ Zigzag foot A
㉝ Needle plate
㉞ Hook cover release button
㉟ Hook cover plate
㊱ Thread cutter
㊲ Feed dogs
㊳ Foot holder
㊴ Thumbscrew
㊵ Lever
㊶ Needle threader lever
㊷ Buttonhole lever
㊸ Needle threader guide
㊹ Carrying handle
㊺ Handwheel
㊻ Ventilation openings
㊼ Thread cutter switch jack*
㊽ Drop feed lever
㊾ Machine socket
㊿ Foot control jack
(51) Power switch
(52) Presser foot lifter

NOTE:
To carry the sewing machine, hold the carrying handle with your hand, and support the sewing machine with the other hand.

NOTE:
Sewing machine design and specifications are subject to change without prior notice.

* Thread cutter switch is an optional item.

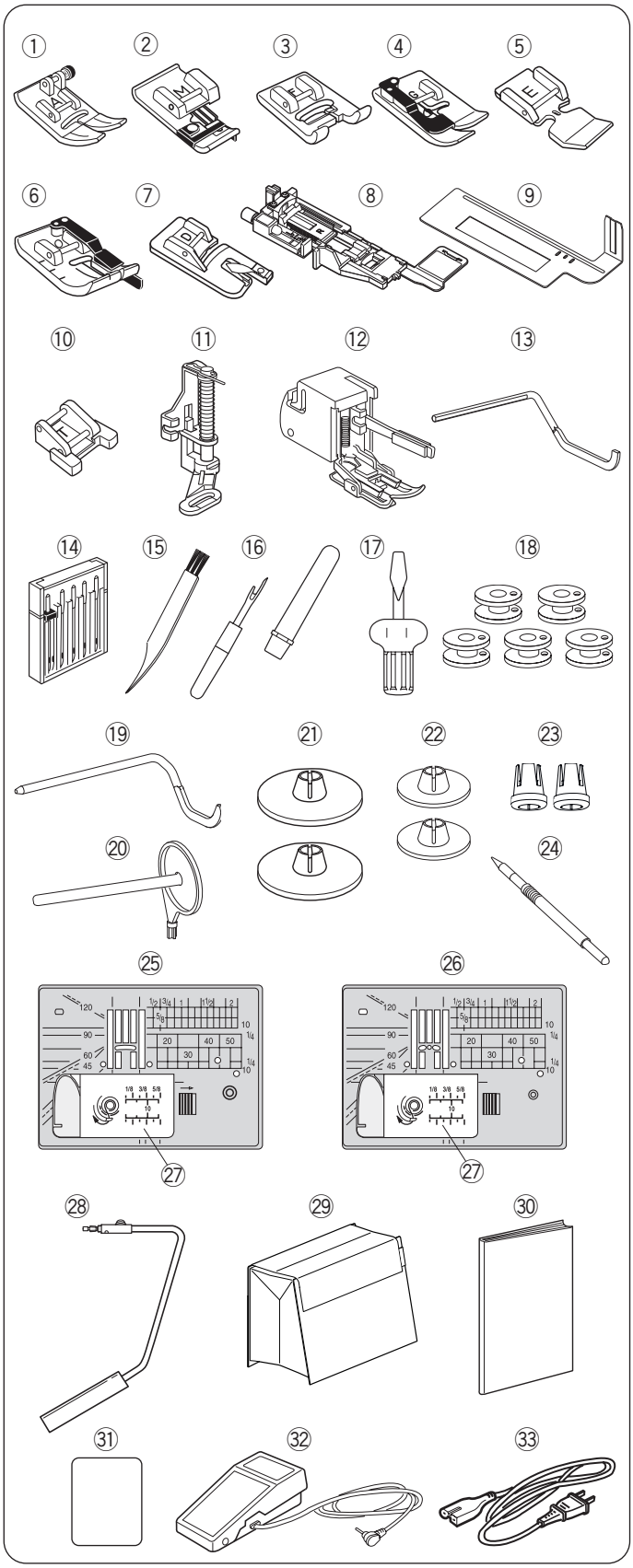

Standard Accessories

No.	Part Name		Part No.
1	Zigzag foot A (set on the machine)		859802006
2	Overcasting foot M		859810007
3	Satin stitch foot F		859806011
4	Blind hemming foot G		859807001
5	Zipper foot E		859805009
6	1/4″ seam foot O		859814012
7	Rolled hem foot D		859804008
8	Automatic buttonhole foot R (in the accessory storage)		862822013
9	Stabilizer plate (in the accessory storage)		859832016
10	Button sewing foot T		859811008
11	Darning foot PD-H		859839002
12	Even feed foot		202137009
13	Quilting guide bar (for even feed foot)		214015007
14	Needle set		859856005
15	Lint brush		802424004
16	Seam ripper (buttonhole opener)		647808009
17	Screwdriver		820832005
18	Bobbin x 5* (1 is set on the machine)		102261103
19	Quilting guide bar		755802001
20	Extra spool pin		809041004
21	Spool holder (large) x 2* (1 is set on the machine)		822020503
22	Spool holder (small) x 2*		822019509
23	Spool holder (special) x 2*		862408008
24	Touch panel stylus		860194002
25	Needle plate (set on the machine)		861606016
26	Straight stitch needle plate		862817118
27	Hook cover plate		809136100
28	Knee lifter		846417011
29	Semi-hard fabric cover		863422001
30	Instruction book		863850301
31	Threading guide sticker		101506A09
32	Foot control		C-1036
33	Power cable**	U.S.A. and Canada	856519004
		U.K.	830377008
		Australia	830314018
		Continental Europe	830335004

* This is the part number for a single item (not for a set).
** The power cable included may differ from the illustration.

Instructional Video

https://youtube.com/playlist?list=PLQy563Wz2acvI-LLtiKSPOqAfY2MdFBX5&si=OANuAE-SQbxNREPI

Example

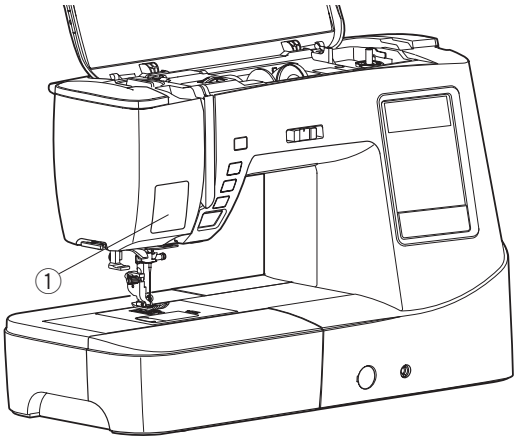

Guide Sticker for Threading

There is a threading guide sticker in the standard accessories. If you wish, you can attach the sticker on the machine to check the threading procedure.

① Threading guide sticker

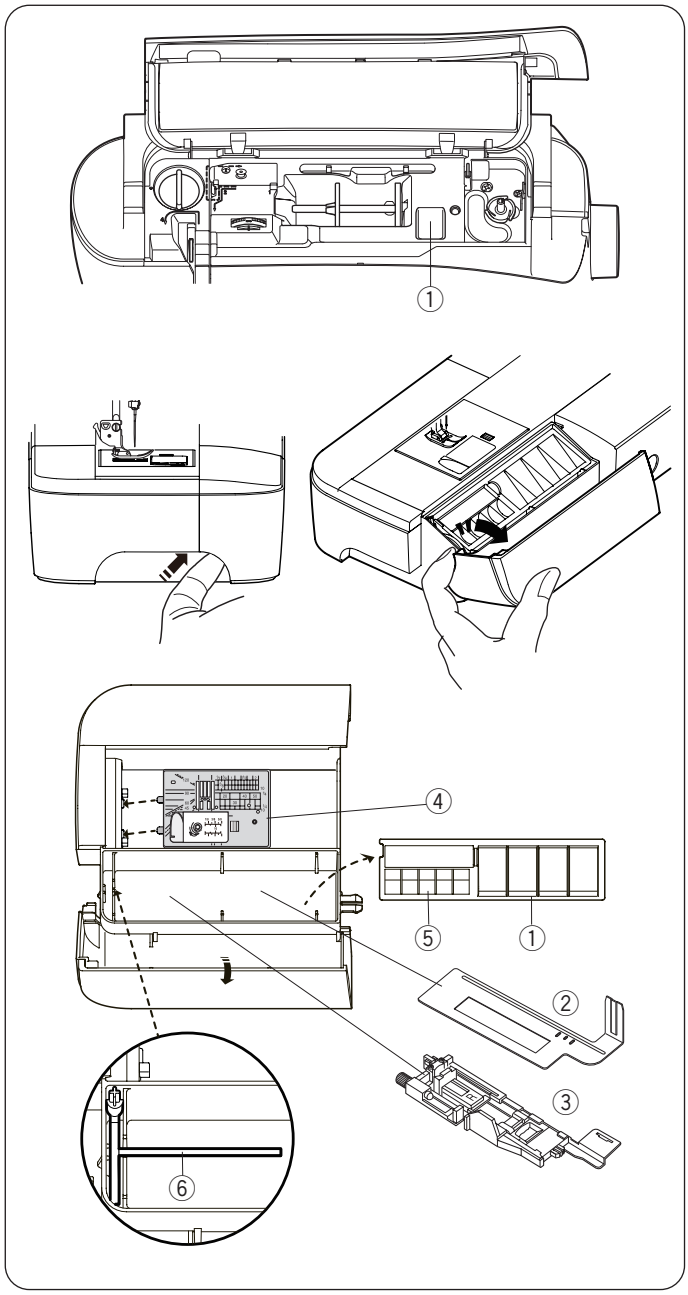

Accessory Storage

The accessories can be conveniently stored in the compartment of the extension table and the compartment under the top cover.

To store the accessories in the compartment of the extension table, push up the cover towards you to open the accessory storage.

① Presser foot
② Stabilizer plate
③ Automatic buttonhole foot R
④ Straight stitch needle plate
⑤ Bobbin
⑥ Extra spool pin

Other accessories can be also stored in the compartment in the extension table.

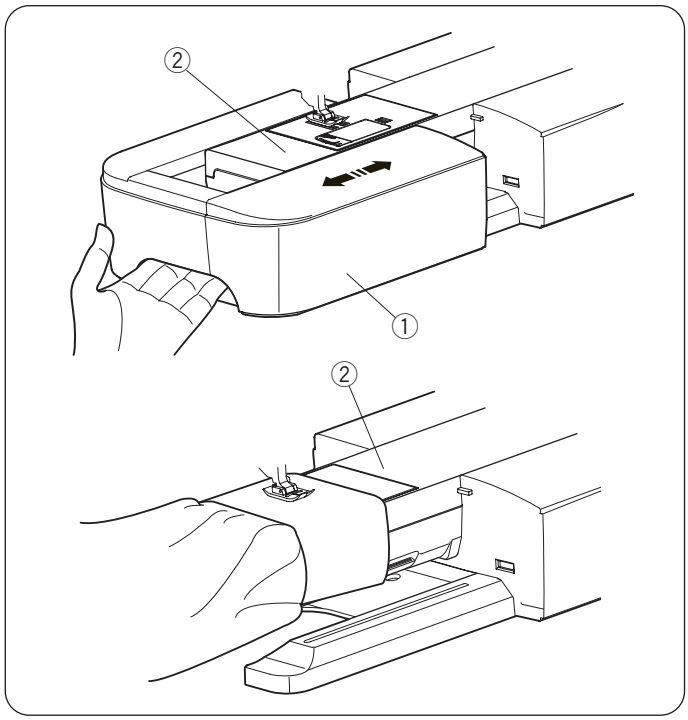

Extension Table

The extension table provides an extended sewing area and can be removed for free-arm sewing.

① Extension table
② Free-arm

To detach:

Draw the table out to the left.

To attach:

Slide the table on the base and push the table to the right.

Free-arm sewing

Free-arm sewing is used for stitching sleeves, waistbands, pant legs or any other tubular garments. It is also useful for darning socks or mending knees or elbows.

② Free-arm

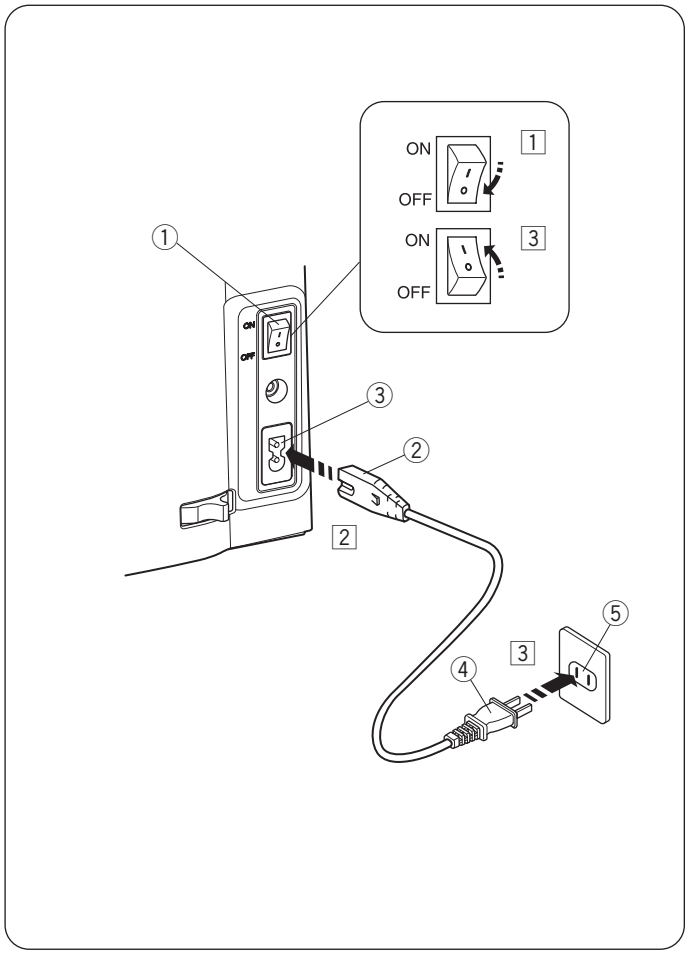

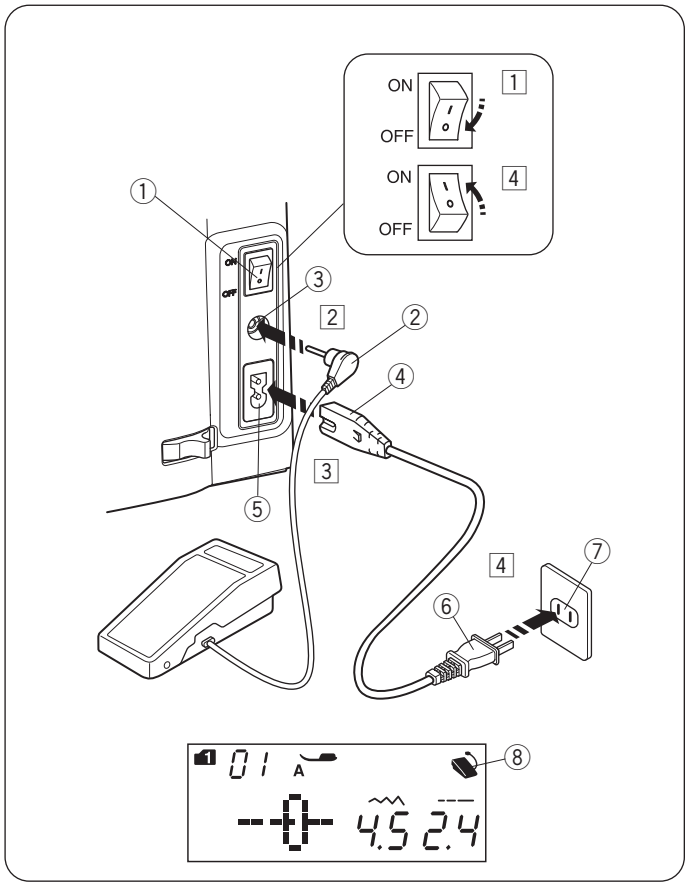

Before Using Your Sewing Machine

Before using your sewing machine for the first time, place a scrap of fabric under the presser foot and run the machine for a few minutes. Wipe away any oil which may appear.

GETTING READY TO SEW

Connecting the Power Supply

1 First make sure the power switch ① is OFF.
2 Insert the machine plug ② of the power supply cord into the machine socket ③.
3 Insert the power supply plug ④ into the wall outlet ⑤, and turn the power switch ① ON.

① Power switch
② Machine plug
③ Machine socket
④ Power supply plug
⑤ Wall outlet

NOTE:
Make sure to use the power supply cable that came with the machine.
If you turn the power switch OFF, wait for 5 seconds before turning it on again.

⚠ WARNING:
While in operation, always keep your eyes on the sewing area, and do not touch any moving parts such as the thread take-up lever, handwheel or needle.
Always turn the power switch OFF and unplug the machine from the power supply:
- when leaving the machine unattended.
- when attaching or removing parts.
- when cleaning the machine.

Do not place anything on the foot control.

If you wish to use the foot control, insert the pin connector into the jack on the machine.

1 First make sure the power switch ① is OFF.
2 Insert the pin connector ② into the jack ③ on the machine.
3 Insert the machine plug ④ of the power supply cord into the machine socket ⑤.
4 Insert the power supply plug ⑥ into the wall outlet ⑦, and turn the power switch ON.
The foot control sign ⑧ will be displayed when the foot control is connected to the machine.

① Power switch
② Pin connector
③ Jack
④ Machine plug
⑤ Machine socket
⑥ Power supply plug
⑦ Wall outlet
⑧ Foot control sign

NOTE:
The start/stop button does not work when the foot control is connected.

Operating Instructions:

The symbol “O” on a switch indicates the “OFF” position of the switch.

For the U.S.A. and Canada only
Polarized plug (one blade wider than the other):
To reduce the risk of electric shock, this plug is intended to fit in a polarized outlet only one way. If it does not fit fully in the outlet, reverse the plug. If it still does not fit, contact a qualified electrician to install the proper outlet. Do not modify the plug in any way.

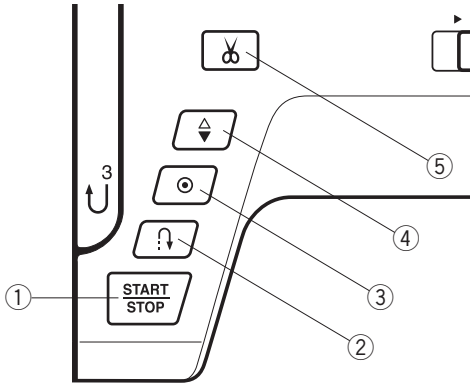

① 

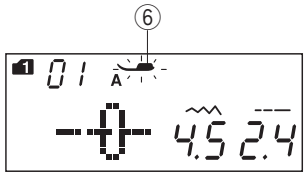

② 

③ 

④ 

⑤ 

Machine Operating Buttons

① Start/stop button

Press this button to start or stop the machine.

The machine starts running slowly for the first few stitches, it then runs at the speed set by the speed control slider. The machine runs slowly as long as this button is pressed.

The button will turn red when the machine is running, and blue when it has been stopped.

Pressing and holding this button while sewing will slow down the sewing speed and the machine will stop when the button is released.

NOTE:
- The start/stop button cannot be used when the foot control is connected to the machine.
- The machine will not run and the presser foot mark ⑥ will blink if you start the presser foot in the up position. Lower the presser foot and press the start/stop button.
- You can select the desired start-up speed from slow, medium or high (refer to page 26).

② Reverse button

When sewing stitch pattern 01, 04-07, 11-13, 01S, 04S-07S, (mode 1) or 37-38 (mode 2), the machine will sew in reverse as long as the reverse button is pressed.

If stitch pattern 01, 04-07, 11-13, 01S, 04S-07S, (mode 1) or 37-38 (mode 2) has been selected and the foot control is not connected, the machine will start sewing in reverse as long as the reverse button is pressed.

If you press the reverse button when sewing any other patterns, the machine will immediately sew locking stitches and automatically stop.

③ Auto-lock button

When sewing stitch pattern 01, 04-07, 11-13, 01S, 04S-07S, (mode 1) or 37-38 (mode 2) the machine will immediately sew locking stitches and automatically stop when the auto-lock button is pressed.

When sewing all other patterns, the machine will sew to the end of the current pattern, sew locking stitches and stop automatically.
The machine will trim the threads automatically after locking the stitch when the auto thread cutting is turned on (refer to page 72).

④ Needle up/down button

Press this button to bring the needle bar up or down. The machine will stop with the needle in down position. However, you can change the needle stop position in the machine setting mode (refer to page 26).

⑤ Thread cutter button

After finish sewing, press this button to trim the threads. The needle bar automatically rises after trimming the threads (refer to page 30).

NOTE:
Use the thread cutter on the face cover if the thread is #30 or thicker (refer to page 30).

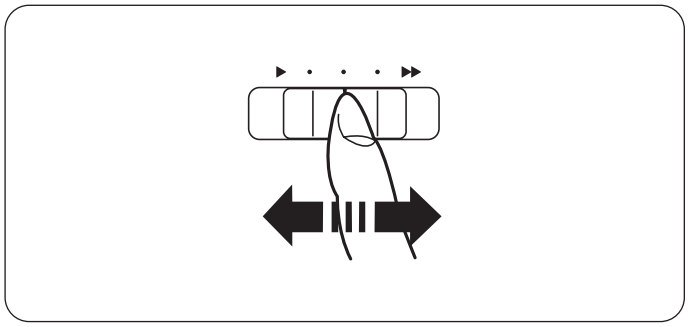

Controlling Sewing Speed

Speed control slider

You can limit the maximum sewing speed with the speed control slider according to your sewing needs.
To increase the sewing speed, move the slider to the right.
To decrease the sewing speed, move the slider to the left.

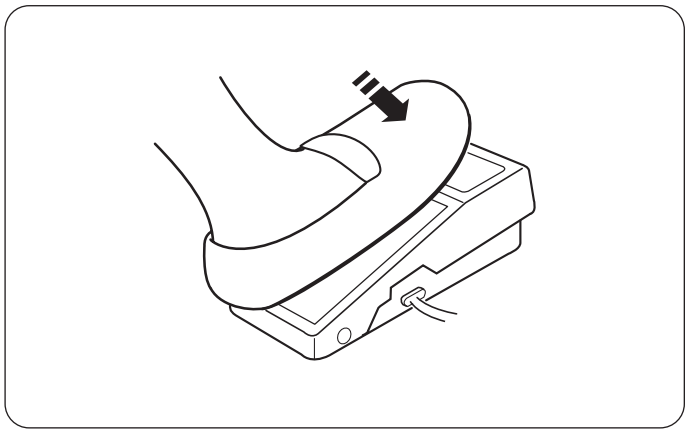

Foot Control

Pressing on the foot control can vary sewing speed. The harder you press the foot control, the faster the machine runs.

NOTE:
The machine runs at the maximum speed set by the speed control slider when the foot control is fully depressed.

Operating Instructions:

Foot control model YC-485EC-1 is for use with this sewing machine.

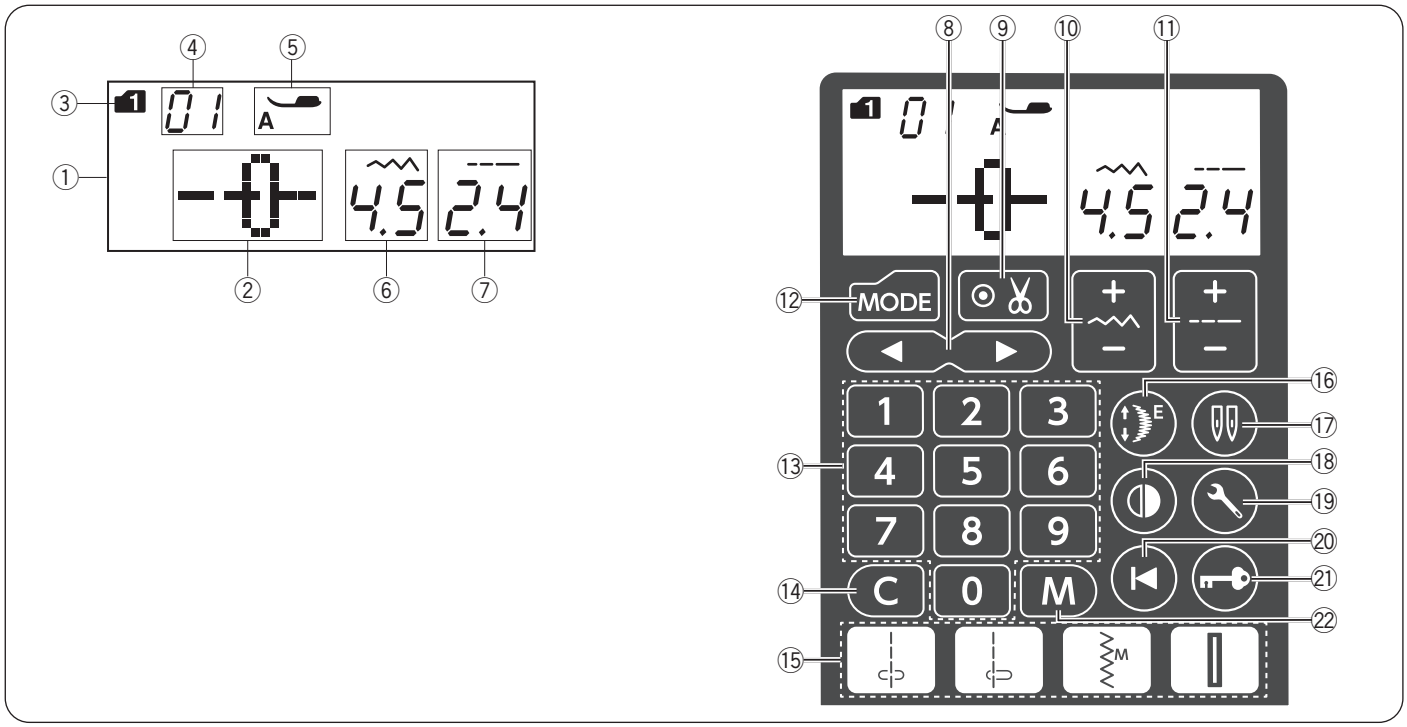

Function Keys

① **LCD screen**

The LCD screen shows the following information when the machine is turned on:

② Stitch pattern
③ Mode
④ Stitch pattern number
⑤ Recommended type of presser foot
⑥ Stitch width
⑦ Stitch length

⑧ **Cursor key** (refer to page 79)

Press " ◁ " or " ▷ " to move the cursor to check or edit the pattern combination.

⑨ **Auto thread cutting key** (refer to page 72)

Press this key if you wish to cut the threads automatically after finish sewing with a locking stitch.
When programming a pattern combination, press this key to cut the threads automatically after finish sewing.

⑩ **Stitch width adjusting key** (refer to pages 31, 40, 49)

Press this key to alter the stitch width.

⑪ **Stitch length adjusting key** (refer to pages 31, 40, 49)

Press this key to alter the stitch length.

⑫ **Mode key** (refer to pages 24, 25)
Press this key to select the mode.
When the power is turned on, the pattern selection mode 1 is set automatically.

⑬ **Number keys** (refer to page 24)
Enter a 2-digit pattern number to select the desired stitch pattern in modes 1 to 6.

⑭ **Clear key** (refer to pages 26, 80)

Press this key to clear the memorized stitch pattern.
Press and hold this key until the buzzer sounds to delete the whole pattern combination.

⑮ **Direct pattern selection keys** (refer to page 24)

You can select the stitch patterns 01, 04, 11, and 23 (mode 1) directly.
When the straight stitch needle plate is being attached, you can select the stitch patterns 01S or 04S only.

⑯ **Elongation key** (refer to page 67)

Press this key to elongate satin stitch patterns.

⑰ **Twin needle key** (refer to page 68-69)
Press this key when sewing with a twin needle.

⑱ **Mirror image key** (refer to page 73)

Press this key to sew a mirror image of the selected pattern.

⑲ **Set key** (refer to pages 25-28)

Press this key to enter the machine setting mode for customizing the machine settings.

⑳ **Startover key** (refer to page 74)

Press this key to sew a pattern combination from the beginning.

㉑ **Lockout key** (refer to page 14)

Press this key to lockout the machine when threading the machine, replacing the accessories, etc.
To reduce the risk of injury, all the buttons and keys are deactivated.
To unlock the machine, press this key again.

㉒ **Memory key** (refer to page 80)

Press this key to register programmed pattern combinations.
Up to 50 stitch patterns combination can be memorized.

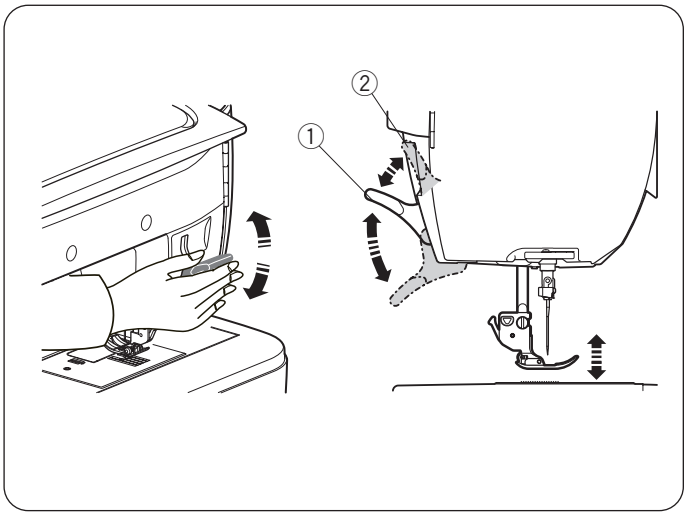

Raising and Lowering the Presser Foot

The presser foot lifter raises and lowers the presser foot.

① Presser foot lifter

You can raise the presser foot higher than the normal up position. This allows for changing the needle plate, and also helps you to place thick layers of fabrics under the foot.

② Extra lifted position

NOTE:
Do not turn the handwheel or press the up/down needle button when the presser foot is in the extra lifted position.

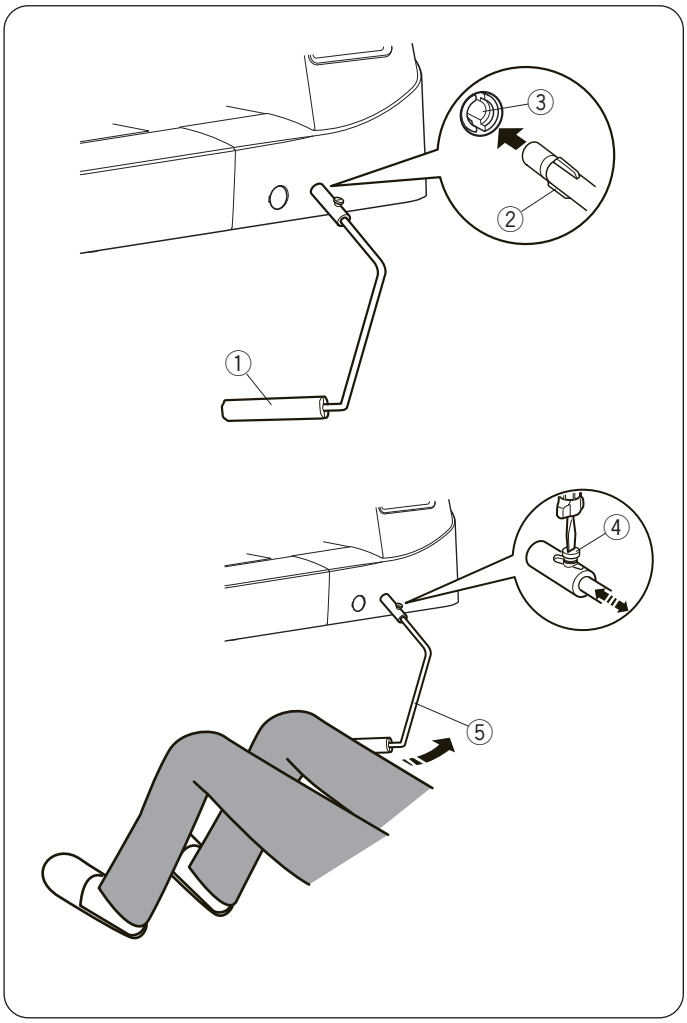

Knee Lifter

The knee lifter is extremely helpful when sewing patchwork, quilting, etc., since it allows you to handle the fabric while your knee controls the presser foot.

Attaching the knee lifter

Match the ribs on the knee lifter with the notches in the knee lifter socket and insert the knee lifter.

① Knee lifter
② Rib
③ Knee lifter socket

Adjusting the knee lifter

The angle of the knee lifter can be adjusted to fit you. Loosen the setscrew and slide the angle bar in or out to adjust the angle of the knee lifter.
Tighten the setscrew to secure the angle bar.

④ Setscrew
⑤ Angle bar

Using the knee lifter

Push the knee lifter with your knee to easily move the presser foot up and down.
You can control how high the foot rises by the amount of knee pressure you exert.

NOTE:
Do not touch the knee lifter while stitching, otherwise the fabric will not be fed smoothly.

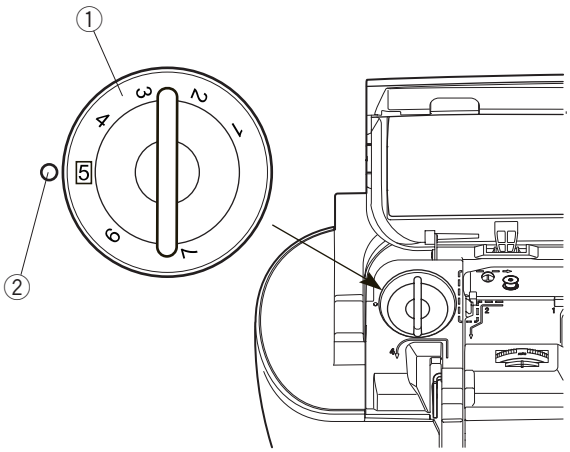

Adjusting the Foot Pressure

The foot pressure can be adjusted with the foot pressure dial located under the top cover.

The dial has 7 setting positions from 1 to 7.
For ordinary sewing, set 5 at the setting mark.

① Foot pressure dial
② Setting mark

Reduce the pressure when sewing fine synthetics and stretch fabrics.
To reduce the pressure, set the dial at a lower number.

Increase the pressure when sewing heavy weight fabrics.
To increase the pressure, set the dial at a higher number.

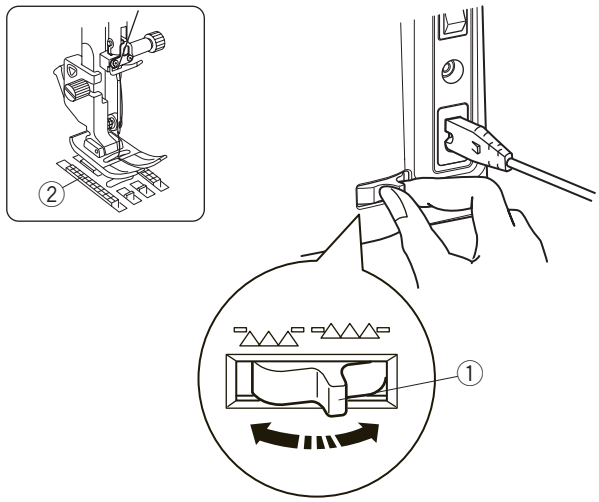



Dropping the Feed Dogs

The feed dogs can be lowered for sewing on buttons, free motion quilting, etc.

Shift the drop feed lever toward you to lower the feed dogs.

① Drop feed lever
② Feed dogs

Shift the drop feed lever away from you to raise the feed dogs, it will return to the up position when you start the machine.

NOTE:
If you start the machine with the feed dogs lowered, a message will appear on the LCD screen.
The machine will not run with the feed dogs lowered when selected following pattern numbers; 23 to 32, 34 to 36 (mode 1), stitch patterns (mode 3-6).

Balancing Thread Tension

Auto-thread tension

For general sewing, set the thread tension dial at AUTO, which covers a wide range of sewing conditions.

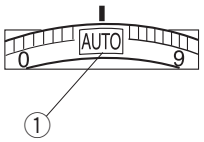

① Thread tension dial

Balanced thread tension

For straight stitch sewing, both needle and bobbin threads will join at the middle of the fabrics.

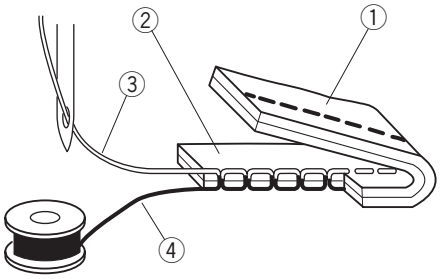

For zigzag stitch sewing, the needle thread will appear slightly on the wrong side of the fabric.

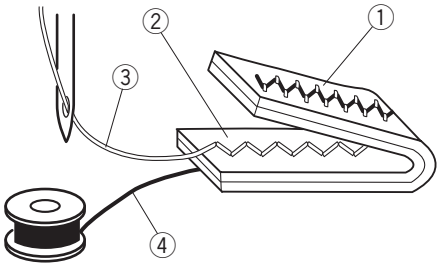

① Wrong side of fabric
② Right side of fabric
③ Needle thread
④ Bobbin thread

Manual thread tension adjustment

You may need to adjust tension manually depending on the sewing conditions such as the type of fabric and number of layers.

If the needle thread is too tight, the bobbin thread appears on the right side of the fabric.

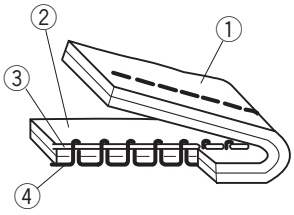

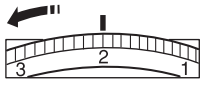

① Wrong side of fabric
② Right side of fabric
③ Needle thread
④ Bobbin thread

Turn the thread tension dial to a lower number to decrease the thread tension.

If the needle thread is too loose, the needle thread loops on the underside of the fabric.

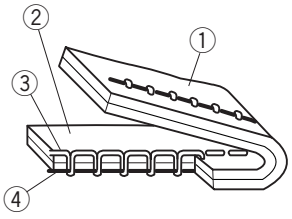

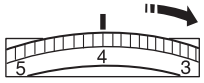

① Wrong side of fabric
② Right side of fabric
③ Needle thread
④ Bobbin thread

Turn the thread tension dial to a higher number to increase the thread tension.

NOTE:
Manual thread tension adjustment may be required when the stitch width is set more than “7.0”.

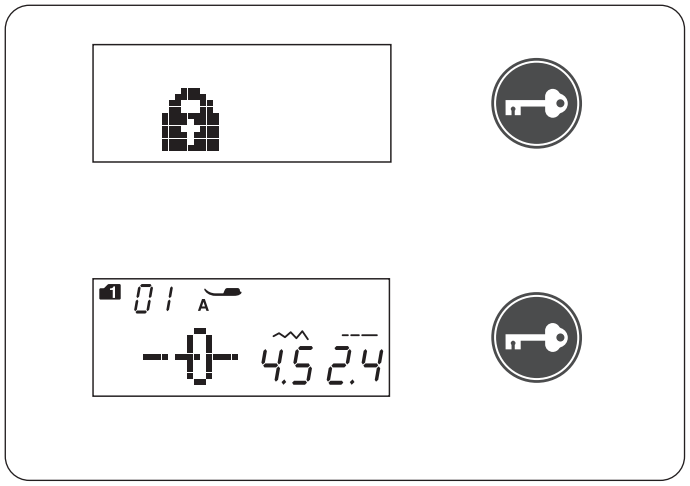

Lockout Key

Press this key to lockout the machine when threading the machine, replacing the accessories, etc.

To reduce the risk of injury, all the buttons and keys except the lock key are deactivated.

To unlock the machine, press this key again.

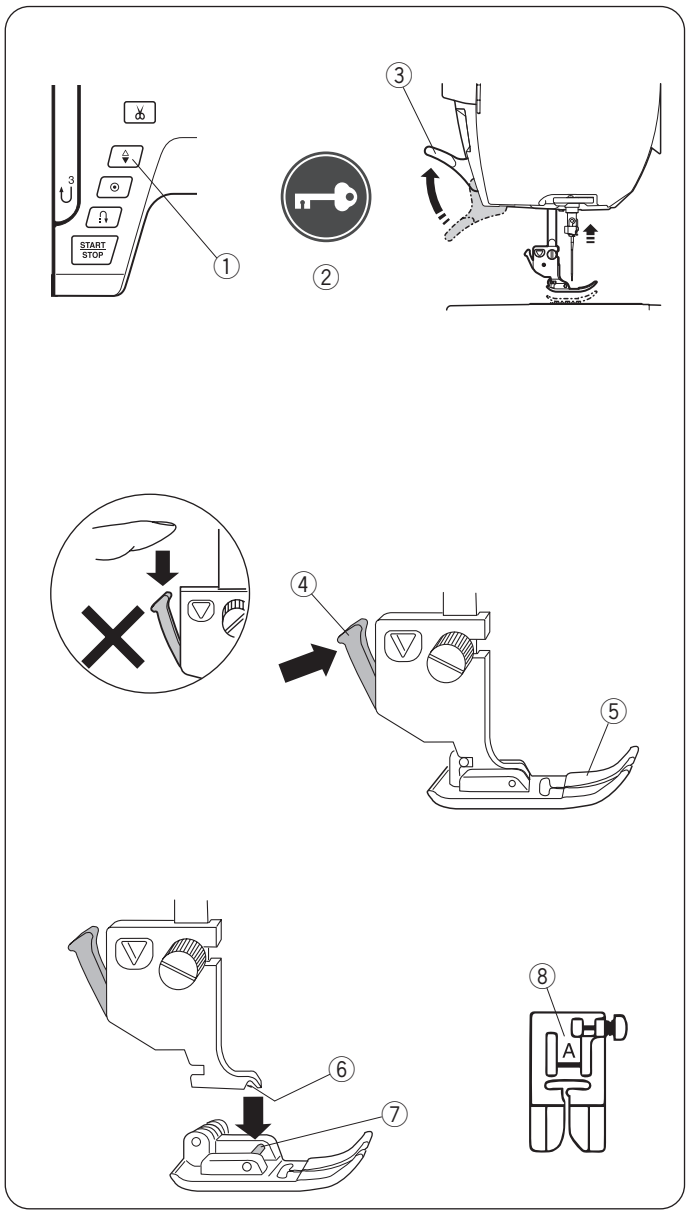

Replacing the Presser Foot

⚠ CAUTION:

- Always make sure to press the lockout key to lockout the machine or turn the power switch OFF before replacing the presser foot.
- Use the proper foot for the selected pattern. The wrong foot can cause the needle to break.

Removing the presser foot

Raise the needle by pressing the needle up/down button.
Press the lockout key.

① Needle up/down button
② Lockout key

Raise the presser foot lifter.

③ Presser foot lifter

Press the black lever on the back of the foot holder.
The presser foot will drop off.

④ Lever
⑤ Presser foot

⚠ CAUTION:

To avoid damaging the lever, do not push it down.

Attaching the presser foot

Place the presser foot so that the pin on the foot lies just under the groove of the foot holder.
Lower the presser foot lifter to lock the foot in place.
Each foot is marked with an identification letter.

Press the lockout key to unlock the machine.

⑥ Groove
⑦ Pin
⑧ Identification letter

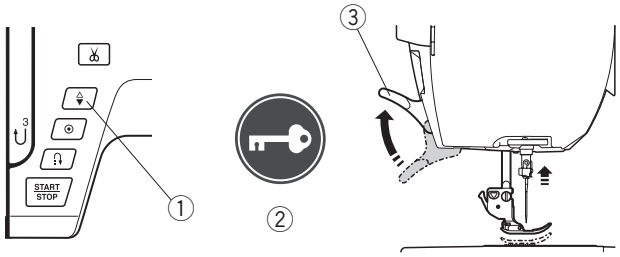

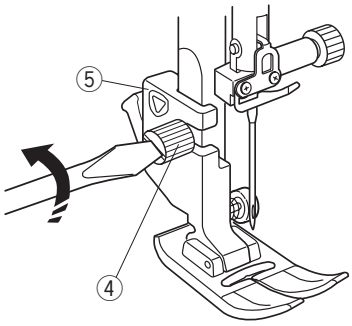

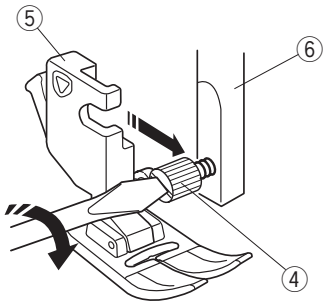

Removing and Attaching the Foot Holder

⚠ CAUTION:

- Always make sure to press the lockout key to lockout the machine or turn the power switch OFF before replacing the foot holder.
- Use the proper foot for the selected pattern. The wrong foot can cause the needle to break.

Removing the foot holder

Raise the needle by pressing the needle up/down button. Press the lockout key and raise the presser foot with the presser foot lifter.

① Needle up/down button
② Lockout key
③ Presser foot lifter

Loosen the thumbscrew and remove the foot holder.

④ Thumbscrew
⑤ Foot holder

Attaching the foot holder

Attach the foot holder to the presser bar from the rear. Tighten the thumbscrew firmly with the screwdriver.

Press the lockout key to unlock the machine.

④ Thumbscrew
⑤ Foot holder
⑥ Presser bar

Replacing the Needle Plate

Use the straight stitch needle plate when sewing fine fabrics or sewing with straight stitches.

⚠ CAUTION:
Always make sure to press the lockout key to lockout the machine or turn the power switch OFF before replacing the needle plate.

1

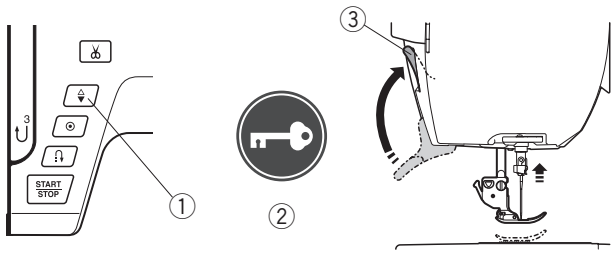

2

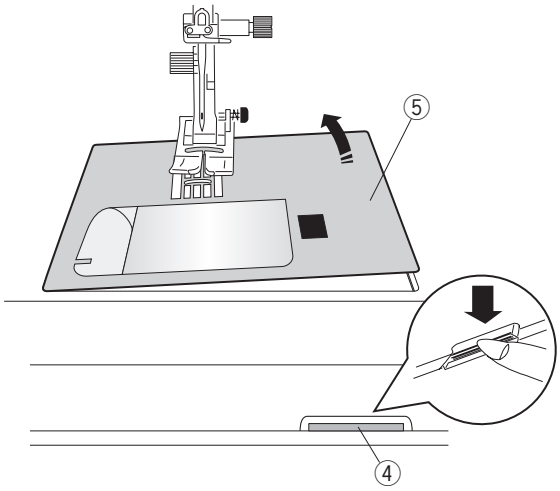

3

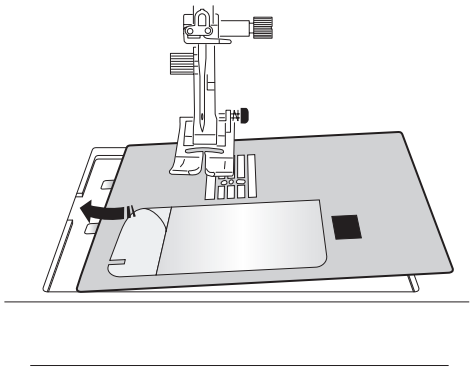

4

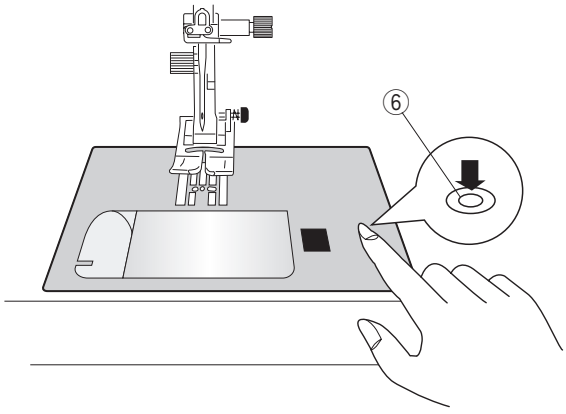

1 Slide the extension table to the left to remove it.

Press the needle up/down button to raise the needle.

Press the lockout key.

Raise and hold the presser foot lifter to the extra lifted position.

① Needle up/down button
② Lockout key
③ Presser foot lifter

2 Push down the needle plate release lever and the needle plate will snap off.

④ Needle plate release lever
⑤ Needle plate

3 Place the straight stitch needle plate on the machine.

Set the left edge of the needle plate into the opening.

4 Push down on the needle plate mark until the needle plate locks in place.

Press the lockout key to unlock the machine.

Turn the handwheel slowly and make sure that the needle does not hit the needle plate.

⑥ Needle plate mark

⚠ CAUTION:
Never press the needle plate release lever while running the machine.

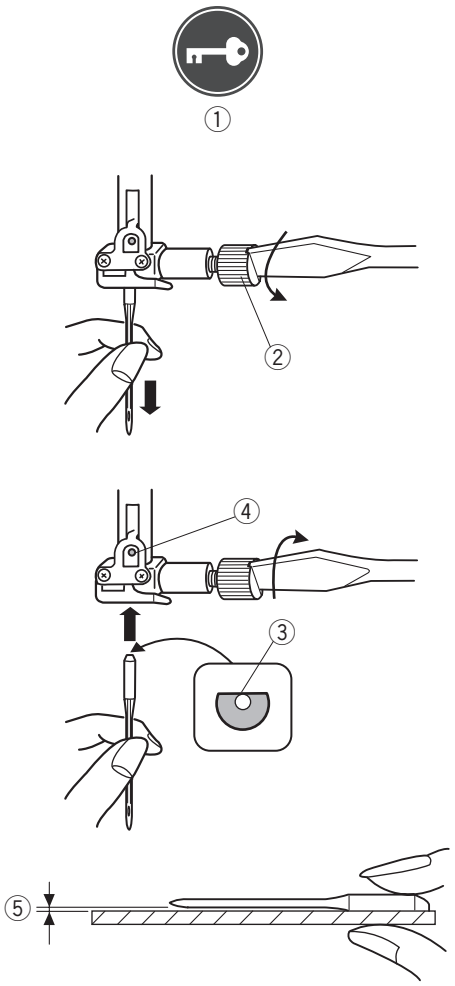

Changing Needles

⚠ CAUTION:
Always make sure to press the lockout key to lockout the machine or turn the power switch OFF before changing the needle.

Raise the needle by pressing the needle up/down button and lower the presser foot.
Press the lockout key to lockout the machine.

① Lockout key

Loosen the needle clamp screw and remove the needle from the clamp.

② Needle clamp screw

Insert a new needle into the needle clamp with the flat side of the needle to the rear.
When inserting the needle into the needle clamp, push it up against the stopper pin and tighten the needle clamp screw firmly with a screwdriver.

Press the lockout key to unlock the machine.

③ Flat side
④ Stopper pin

To check needle straightness, place the flat side of the needle onto something flat (a needle plate, glass, etc.). The gap between the needle and the flat surface should be consistent.

Never use a blunt needle.

⑤ Gap

⚠ CAUTION:
Be sure to tighten the needle clamp screw firmly with a screwdriver when attaching a needle to the machine, otherwise the needle may break or cause malfunction.

Fabric		Thread	Needle
Fine	Lawn Georgette Tricot Organza Crepe	Cotton #80-100 Synthetic #80-100	Blue tip needle Universal needle #9/65-11/75
Medium	Sheeting Jersey Broadcloth Fleece	Cotton #50-80 Synthetic #50-80	Red tip needle Purple tip needle Universal needle #11/75-14/90
Heavy weight	Denim Tweed Coating Quilting	Cotton #40-50 Synthetic #40-50	Red tip needle Purple tip needle Universal needle #14/90-16/100

NOTE:
1 x twin needle, 2 x blue tip needle (#11/75), 1 x red tip needle (#14/90) and 1 x purple tip needle (#14/90) are included in the needle case (part No. 859856005).

Fabric and Needle Chart

- For general sewing, use red needle.
- Fine threads and needles should be used for sewing fine fabrics.
- In general, use the same thread for both needle and bobbin.
- Use a blue tip needle for sewing fine fabrics, stretch fabrics, tricot and buttonholes to prevent skipped stitches.
- Use a purple tip needle for sewing knits, free quilting and across the hem to prevent skipped stitches.
- Use a stabilizer or interface to stretch or fine fabrics to prevent seam puckering.
- Always test the thread and needle size on a small piece of the same fabric you will use for actual sewing.

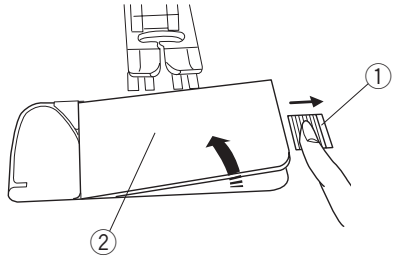

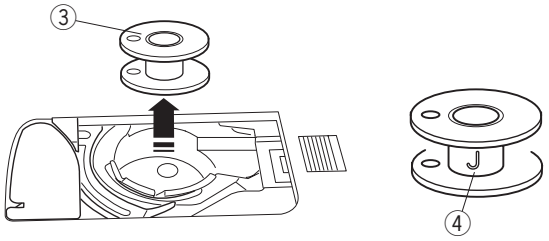

Winding the Bobbin

Removing the Bobbin

Slide the hook cover release button to the right, and remove the hook cover plate.

① Hook cover release button
② Hook cover plate

Lift out the bobbin from the bobbin holder.

③ Bobbin

NOTE:
Use “J” plastic bobbins ④ for the horizontal hook. Using other bobbins, such as pre-wound paper bobbins, may cause stitching problems and/ or damage to the bobbin holder.

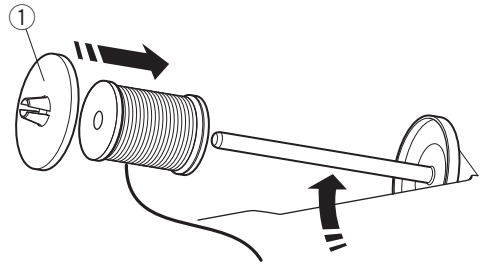

Setting the spool of thread

Lift up the spool pin. Place the spool of thread on the spool pin.
Attach the large spool holder, and press it firmly against the spool of thread.

① Large spool holder

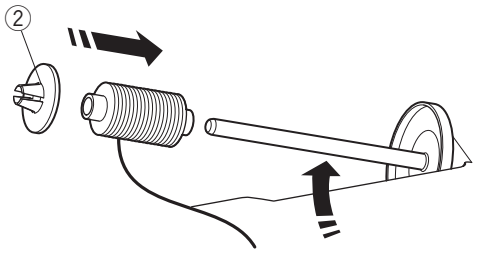

Use the small spool holder to hold narrow or small spools of thread.

② Small spool holder

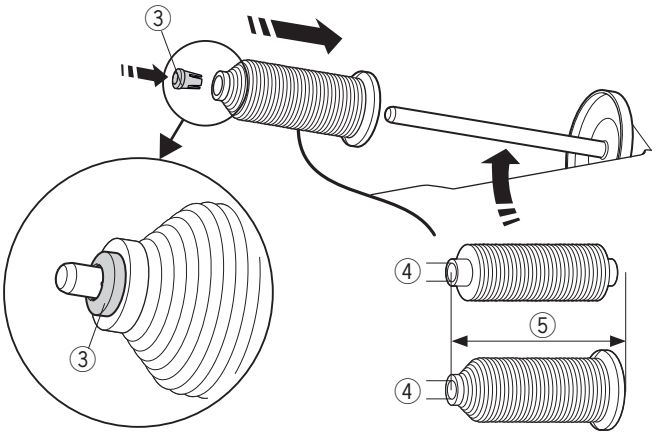

Use the spool holder (special) to hold the specific size of the spool of threads as shown.

The sizes of the spools of thread are as follows;
The hole diameter of the spool has a range of 9.5 mm to 10.5 mm (3/8″ to 7/16″), and the spool length has a range of 70 mm to 75 mm (2 3/4″ to 3″).

③ Spool holder (special)
④ Hole diameter (9.5 mm to 10.5 mm)
⑤ Spool length (70 mm to 75 mm)

Firmly insert the spool holder (special) into the hole and hold the spool as illustrated.

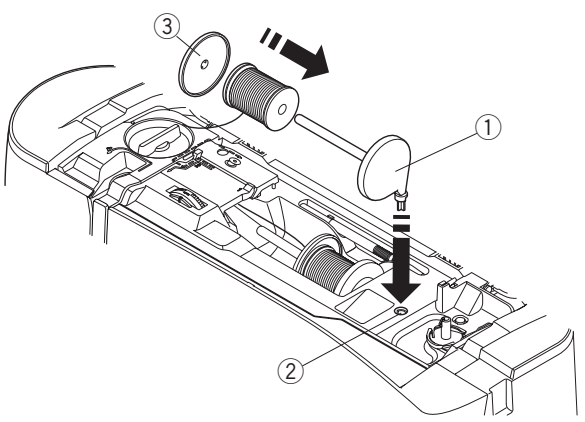

Extra spool pin

Use the extra spool pin when you need to wind a bobbin without unthreading the machine while working on a sewing project.
Insert the extra spool pin into the hole as shown.
Place a spool of thread on the extra spool pin and fix the spool with the spool holder.

① Extra spool pin
② Hole for extra spool pin
③ Large spool holder

NOTE:
The extra spool pin is also used for twin needle sewing.

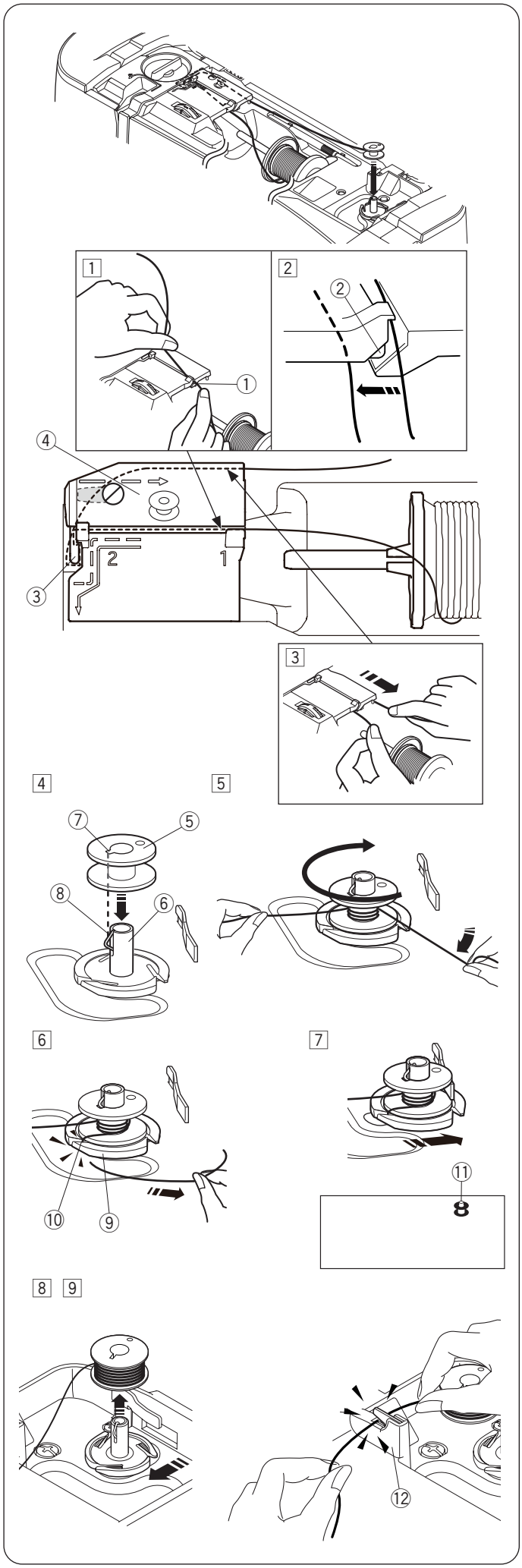

Winding the bobbin

NOTE:
Set the speed control slider at the fastest position (refer to page 9).

1 Pull the thread from the spool.

Hold the thread with both hands and pass the thread into the guide slot.

① Guide slot

2 Be sure that the thread is pulled down under the notch and into the space below the guide slot as shown.

② Notch

3 Draw the thread to the left and forward around the thread guide.

Draw the thread to the rear and to the right around and under the guide plate.

Firmly pull the thread to the right while holding it with both hands.

③ Thread guide
④ Guide plate

4 Put the bobbin on the bobbin winder spindle.

Be sure that the bobbin snaps into the place.

⑤ Bobbin
⑥ Bobbin winder spindle
⑦ Slit
⑧ Spring (projection)

5 Pass the thread to the bobbin.

Hold the thread with both hands and wind it around the bobbin clockwise several times.

6 Insert the thread into one of the slits of the flange plate and pull the thread to cut.

⑨ Flange plate
⑩ Slit

7 Push the bobbin to the right. The bobbin mark appears on the LCD screen.

⑪ Bobbin mark

8 Start the machine.

Stop the machine when the bobbin is fully wound and stops spinning.

Return the bobbin winder spindle to its original position.

9 Remove the bobbin. Cut the thread with bobbin thread cutter B.

⑫ Bobbin thread cutter B

NOTE:
For safety purposes, the machine will automatically stop 1.5 minutes after starting bobbin winding.

Inserting the bobbin

⚠ CAUTION:
Always make sure to press the lockout key to lockout the machine or turn the power switch OFF before inserting the bobbin.

1 Press the lockout key.

Place a bobbin in the bobbin holder with the thread running off counterclockwise as shown on the hook cover plate.

① Lockout key
② End of thread
③ Bobbin holder
④ Hook cover plate

2 Hold the bobbin with your fingertip so it does not rotate.

Guide the thread into the front notch of the bobbin holder.

Pull the thread to the left to pass it under the guide.

⑤ Front notch
⑥ Guide

3 Draw the thread to the left to pass it into the guide path marked “1”.

Make sure that the thread comes out from the side notch of the bobbin holder.

⑦ Guide path 1
⑧ Side notch

NOTE:
If the thread does not come out from the side notch, rethread from step 1.

4 Continue to draw the thread along the guide path marked “2” and pull the thread to the right through the slit. The thread will be cut to a proper length and held in place.

⑨ Guide path 2
⑩ Slit (thread cutter)

5 Set the left edge of the hook cover plate into opening. Push down the hook cover plate to fit in place. Press the lockout key to unlock the machine.

NOTE:
Unless otherwise noted, you can start sewing without drawing up the bobbin thread.
Refer to page 23 for how to draw up the bobbin thread.

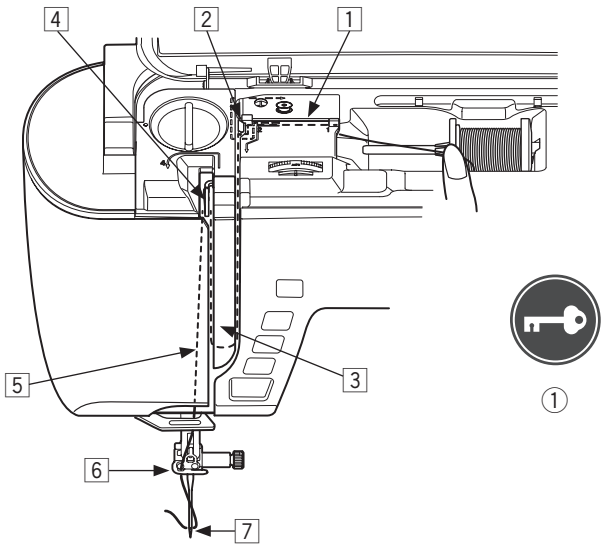

①

Threading the Machine

Raise the presser foot lifter to raise the presser foot.
Turn the power switch ON.
Press the needle up/down button to raise the take-up lever to the highest position.
Press the lockout key.
Pass the thread in the order from 1 to 7.

① Lockout key

⚠ CAUTION:
Always make sure to press the lockout key to lockout the machine or turn the power switch OFF before threading the machine.

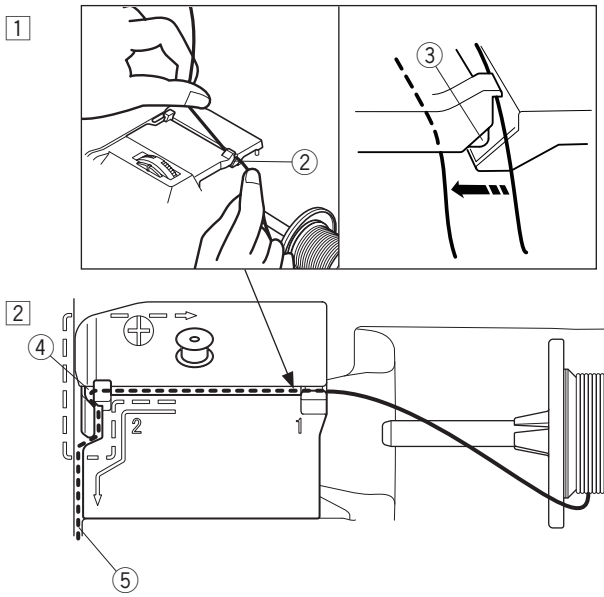

1 Hold the thread with both hands and pass the thread into the guide slot.

② Guide slot

NOTE:
Be sure that the thread is pulled down under the notch and into the space below the guide slot as shown.

③ Notch

2 Hold the thread with both hands and draw the thread around the corner of the guide.

Firmly pull the thread toward you along the right channel until the thread snaps.

④ Corner of the guide
⑤ Right channel

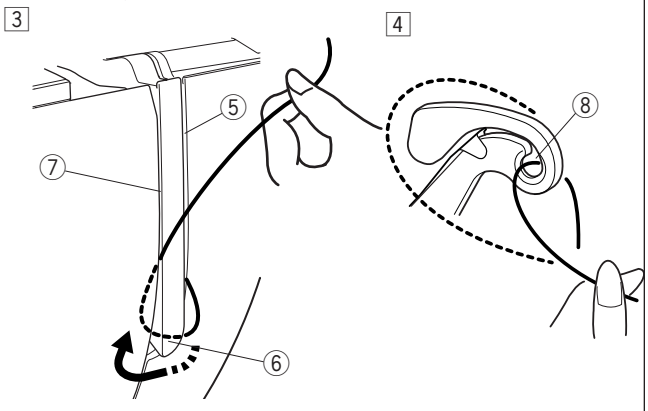

3 Draw the thread down along the right channel and around the bottom of the thread guide plate. Pull the thread up along the left channel.

⑤ Right channel
⑥ Thread guide plate
⑦ Left channel

4 While holding the thread at the spool, firmly draw the thread up and to the back of the take-up lever. Draw the thread forward to slip it into the eye of the take-up lever.

⑧ Eye of the take-up lever

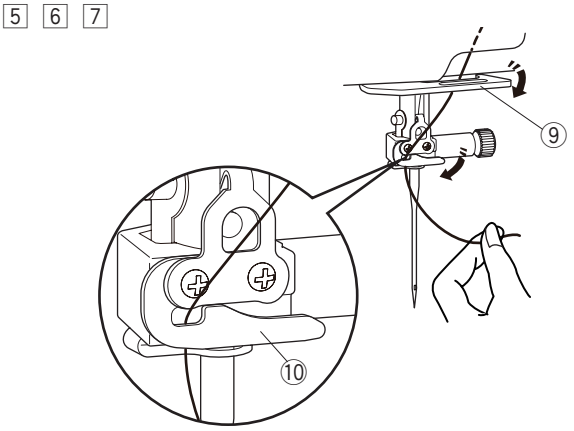

5 Then pull the thread down along the left channel and through the lower thread guide.

⑨ Lower thread guide

6 Slide the thread from the right of the needle bar thread guide to the left.

Be sure to slide the thread to the end of the slit as shown.

⑩ Needle bar thread guide

7 Thread the needle with the needle threader (refer to the next page).

1

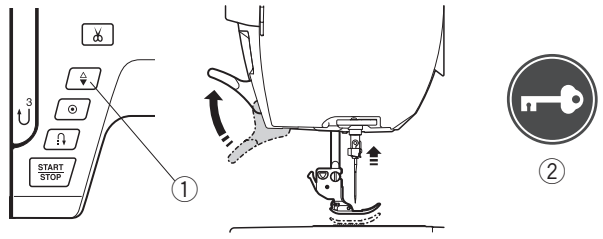

2

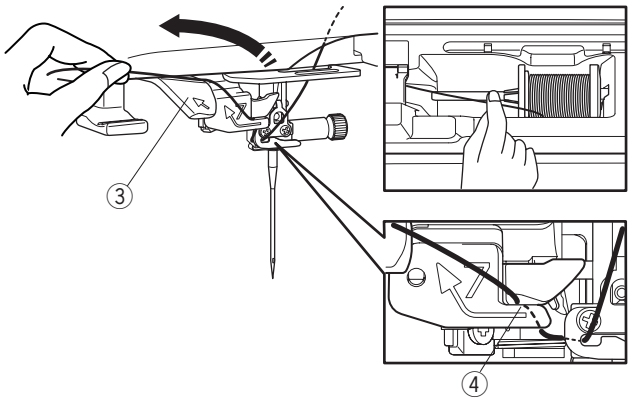

3

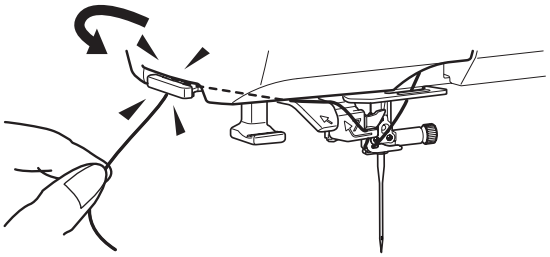

4

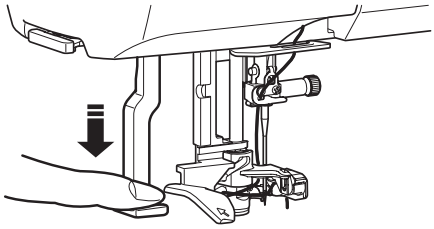

5

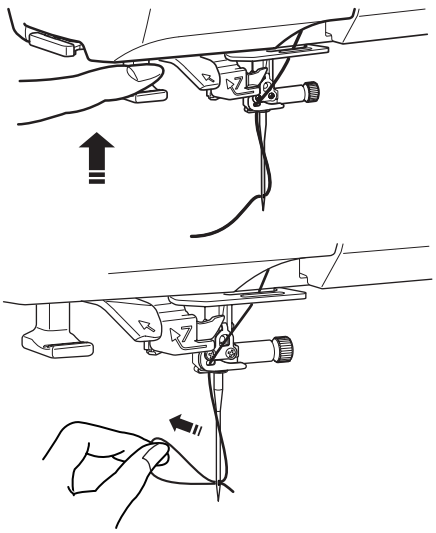

Built-in Needle Threader

NOTE:
- The needle threader can be used with a #11 to #16 needle.
  Thread size 50 to 90 is recommended.
- The needle threader cannot be used with the twin needle.

⚠ CAUTION:
Always make sure to press the lockout key to lockout the machine or turn the power switch OFF before using the built-in needle threader.

1 Press the needle up/down button to raise the needle.
Raise the presser foot lifter to raise the presser foot.
Press the lockout key to lock the machine.
① Needle up/down button
② Lockout key

2 Pull the thread up to the left, over the needle threader guide while holding the thread near the spool with your hand.
③ Needle threader guide

NOTE:
Be sure that the thread pass the slit of the needle threader as shown.
④ Slit

3 Pull the thread up and slip it between the thread cutter and face cover from behind.
Pull the thread toward you to cut.

4 Pull down the needle threader lever as far as it will go.

5 Slowly release the needle threader lever to its original position to pass the thread through the needle eye.
Press the lockout key to unlock the machine.

NOTE:
If the thread loop is formed after releasing the needle threader lever, pull out the thread loop through the needle eye.

Drawing Up the Bobbin Thread

After using auto thread cutting or threading the bobbin holder, you can start sewing without drawing up the bobbin thread.
However, you need to draw up the bobbin thread when sewing gathering stitches, etc.

1

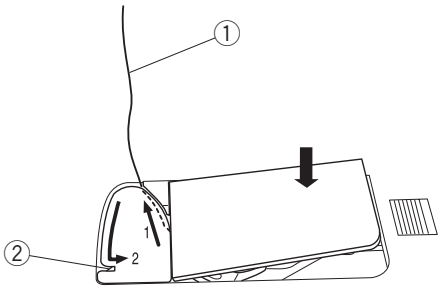

1 Remove the bobbin. Insert the bobbin into the bobbin holder again and rethread the bobbin holder according to the instructions on page 20, but leave a 10 cm (4″) tail of bobbin thread as shown.

① Bobbin thread

NOTE:
Do not cut the bobbin thread with the thread cutter.
② Thread cutter

2

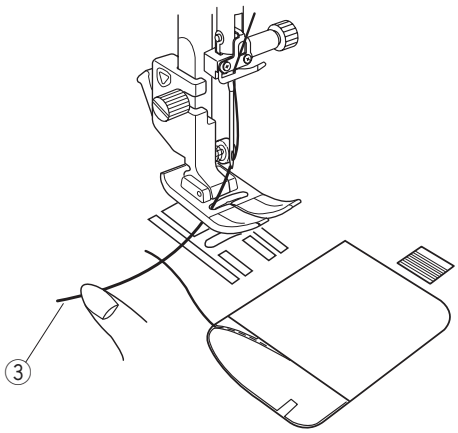

2 Raise the presser foot. Hold the needle thread lightly with your left hand.

③ Needle thread

3

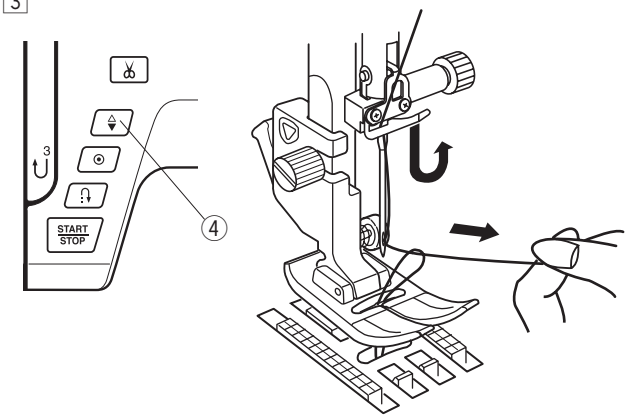

3 Press the needle up/down button twice to lower and raise the needle and pick up the bobbin thread.

④ Needle up/down button

4

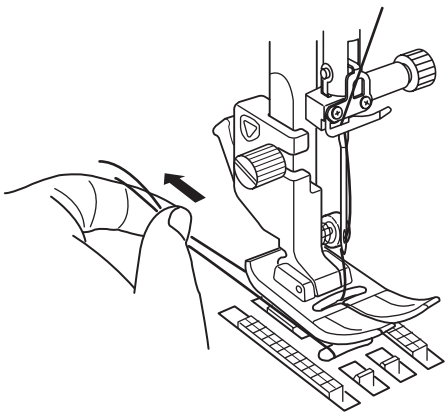

4 Pull both threads 10 cm (4″) under and behind the presser foot.

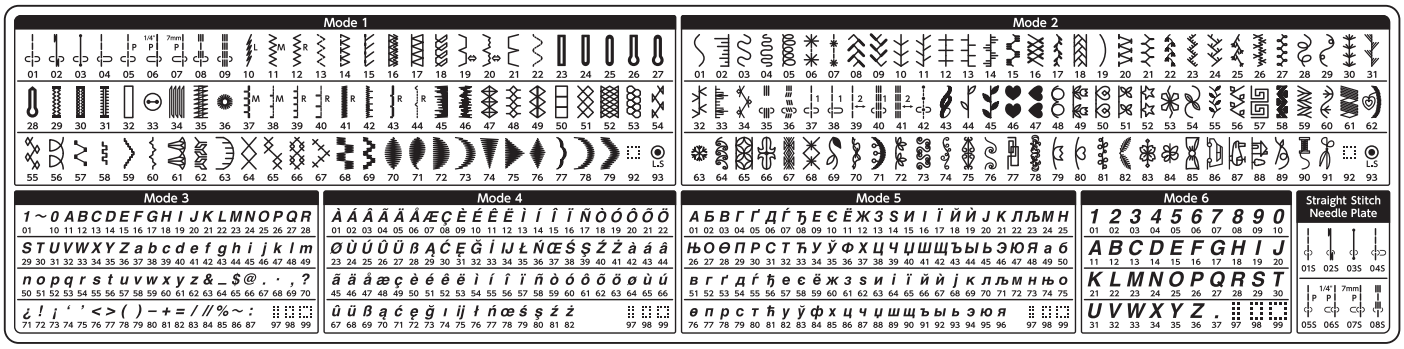



Mode 1-6

To select stitch patterns in modes 1-6, first press the mode key ① to select your desired mode. Each time you press the mode key, the mode number ② indicated on the left side of the screen will change, and the mode changes as follows;

Mode 1: Utility and decorative stitch pattern selection
Mode 2: Decorative stitch pattern selection
Mode 3: Number and letter selection
Mode 4: European accented letter selection
Mode 5: Cyrillic letter selection
Mode 6: 9 mm monogram selection

NOTE:
When the straight stitch needle plate is attached to the machine, the patterns not suitable for the straight stitch needle plate cannot be selected.

Example: To select stitch pattern 53 (mode 2)

1 Turn the power switch ON.

When the power switch is turned ON, the utility and decorative stitch pattern selection (mode 1) is set automatically.

Press the mode key once to select mode 2.



2 Press the number keys on the touch panel. First press key 5 and then press key 3.



3 Now pattern 53 (mode 2) is selected.

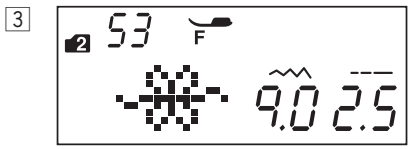

Direct pattern selection

You can select the stitch patterns 01, 04, 11, and 23 (mode 1) directly by pressing the corresponding direct pattern selection keys ③.

Stitch pattern 01S or 04S can be also selected when the straight stitch needle plate is attached to the machine (refer to page 16).
Press the direct pattern selection key ④ to select the stitch pattern 01S.
Press the direct pattern selection key ⑤ to select the stitch pattern 04S.

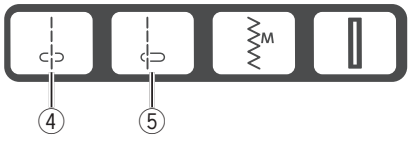

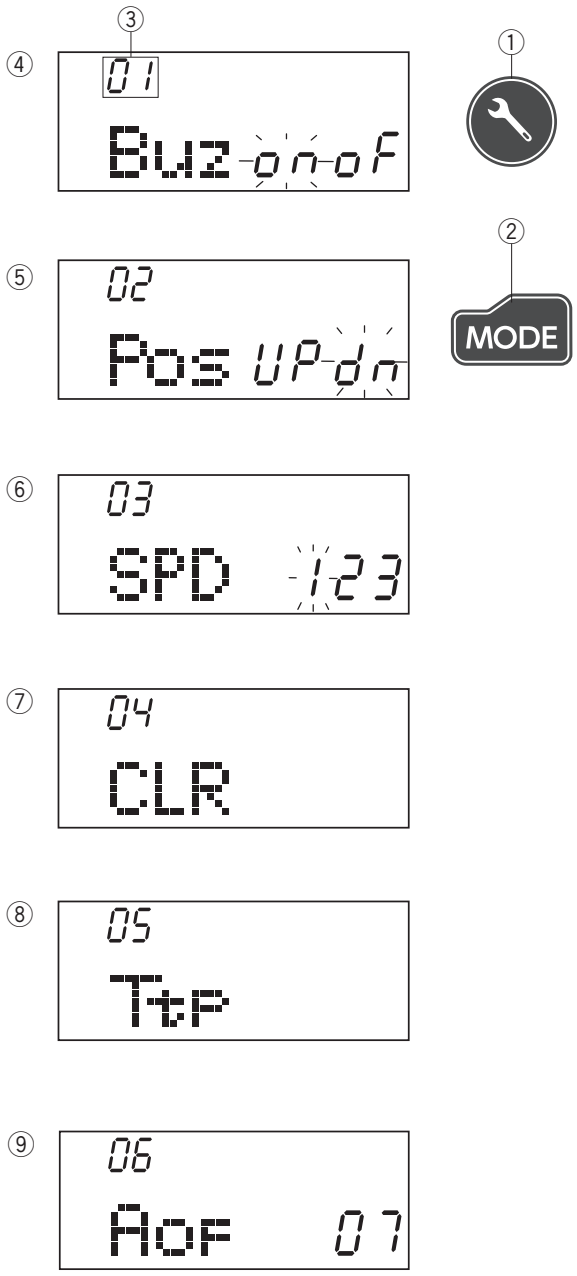

Customizing Machine Settings

You can customize the machine settings to your preference.
Press the set key ① and LCD screen will show the machine setting mode.
Press the mode key ② to select the desired setting.
Each time you press the mode key, the mode number ③ changes, and you can set the following machine functions as follows:

③ Mode number
④ Buzzer sound setting
⑤ Needle stop position setting
⑥ Start up speed setting
⑦ Resetting all to default
⑧ Key position calibration
⑨ Auto-off timer

To exit the machine setting mode, press the set key ①.

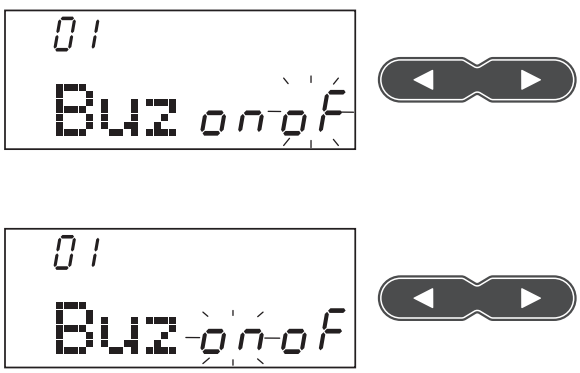

Buzzer sound setting
The buzzer sound can be turned on or off. The default buzzer sound setting is “ON”.
Enter the machine setting mode.

To turn off the buzzer sound, press the cursor key “ ▷ ” and the “oF” mark will blink.

To turn on the buzzer sound, press the cursor key “ ◁ ” and the “on” mark will blink.

Press the set key to exit the machine setting mode.

NOTE:
Caution buzzer sound cannot be turned off.

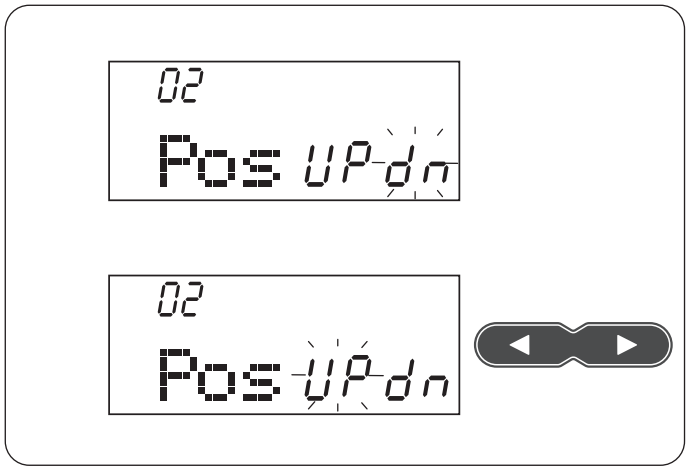

Needle stop position setting

The machine always stops with the needle in the down position except when sewing buttonholes, specialty stitches such as darning or eyelet, monograms, etc. However you can select the needle stop position up or down.

Enter the machine setting mode. Press the mode key to enter the needle stop position setting.
The default needle stop position setting is down position “dn”.

To change the needle stop position, press the cursor key “ ◁ ” and the “UP” mark will blink.

Press the set key to exit the machine setting mode.

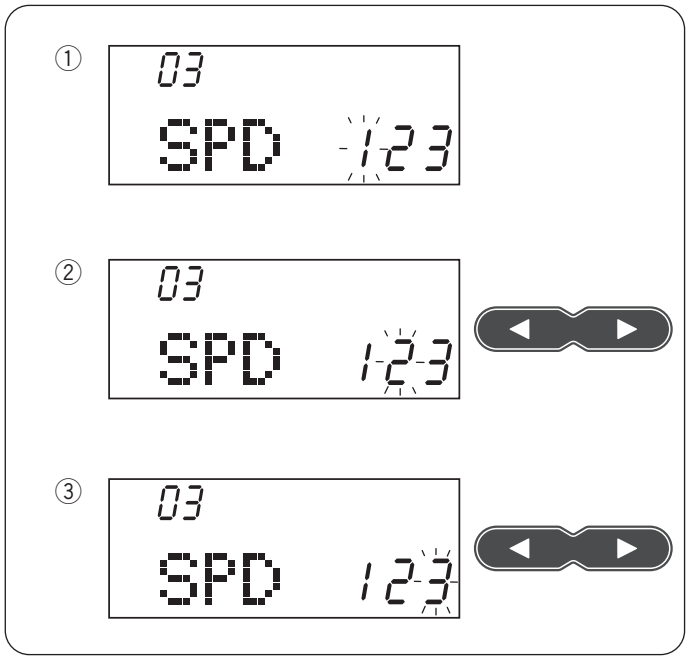

Start-up speed setting

The machine will start running slowly and the sewing speed will gradually increase to maximum when pressing the start/stop button.
You can select the desired start-up speed from 1 (slow) ①, 2 (medium) ② or 3 (high) ③.

Enter the machine setting mode. Press the mode key twice to enter the start-up speed setting.
The default start-up speed setting is “1” (slow). To change the start-up speed, press the cursor key “ ◁ ” or “ ▷ ”, and the selected speed number will blink.

Press the set key to exit the machine setting mode.

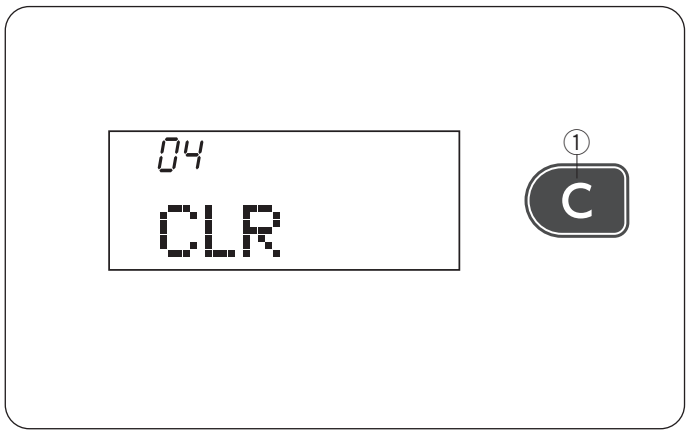

Resetting all to default

The following customized settings can be reset to the default settings (factory settings).

- Buzzer sound
- Needle stop position
- Start up speed setting
- Auto-off timer

Enter the machine setting mode. Press the mode key 3 times to enter the Resetting all to default mode.
Press and hold the clear key ① until the machine beeps to reset the machine to the factory default setting.

Press the set key to exit the machine setting mode.

Key position calibration

If the function keys seem out of alignment, calibrate the key position as follows.

1 Enter the machine setting mode. Press the mode key 4 times to enter the key position calibration.

2 Press the start/stop button ①.

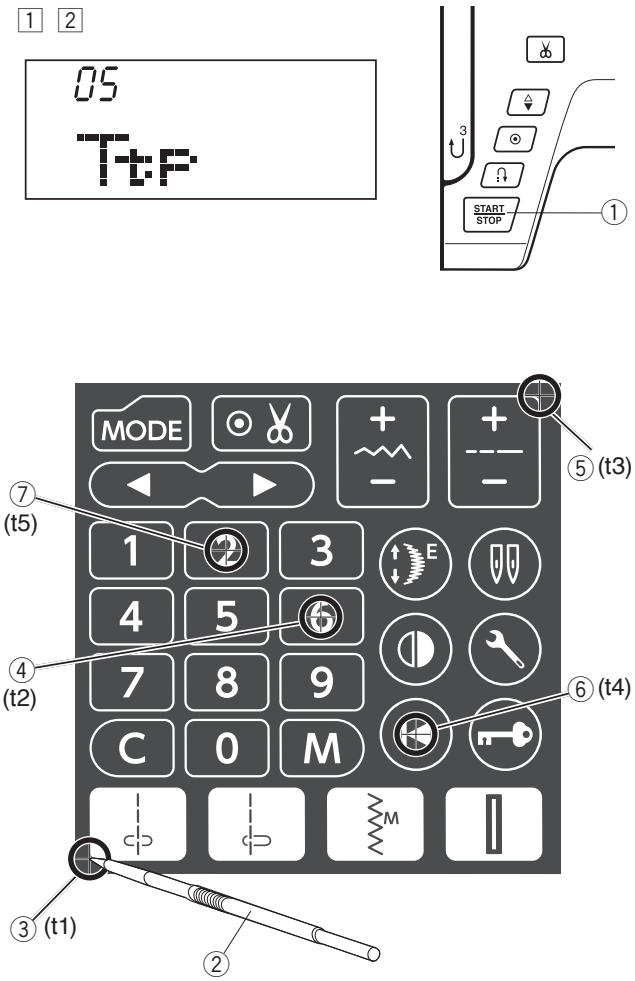

3 The key position adjustment screen appears and "t1" is shown on the right side of the screen. With the touch panel stylus ②, press ③ on the touch panel of your machine.

3
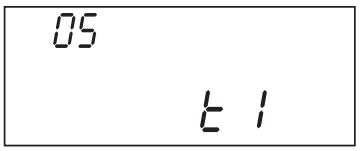

4 "t2" will be shown on the LCD screen. Press ④ on the touch panel.

4
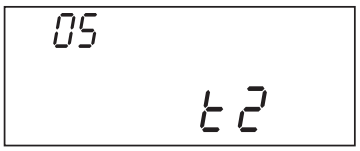

5 "t3" will be shown on the LCD screen. Press ⑤ on the touch panel.

5
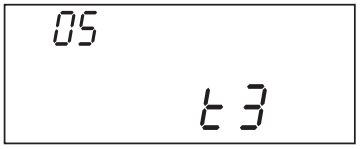

6 "t4" will be shown on the LCD screen. Press ⑥ on the touch panel.

6
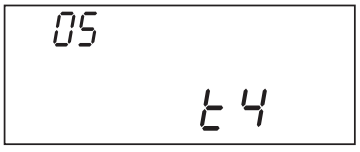

7 "t5" will be shown on the LCD screen. Press ⑦ on the touch panel.

7
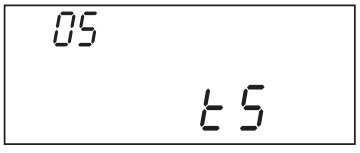

8 The screen will be back to the key position adjustment screen. Press the set key to exit the machine setting mode.

8
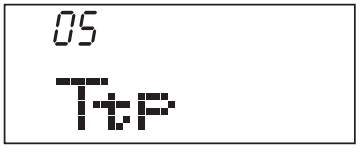



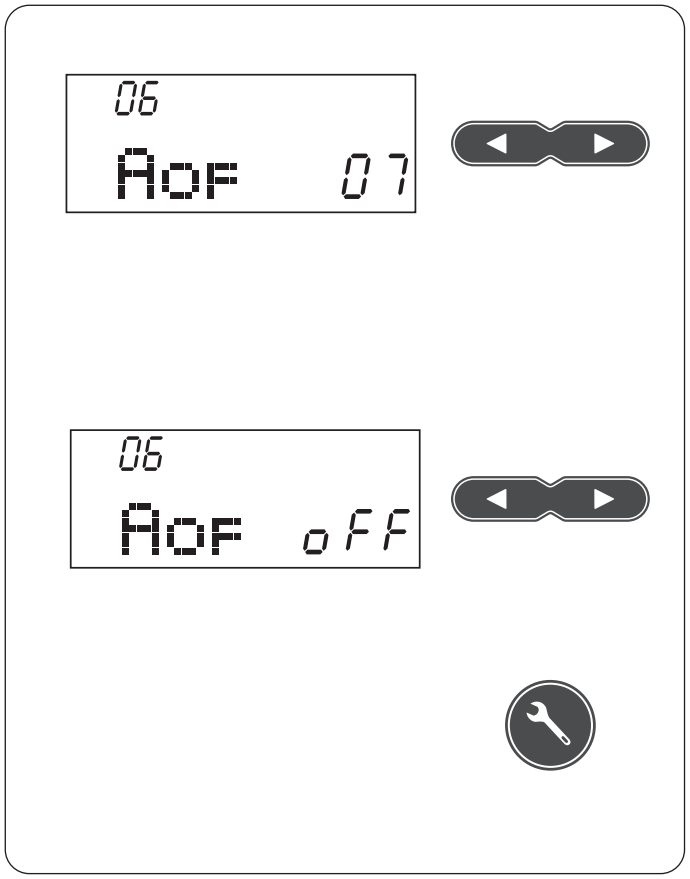

Auto-off timer

NOTE:
The auto-off timer is available in EU countries and some regions which use 200 - 240 voltage standards.

The machine will be turned off if you do not use the machine within the time period set by this timer.

1. Enter the machine setting mode. Press the mode key 5 times to enter the auto-off timer setting.

   The default auto-off timer setting is 7 hours and “07” sign appears on the screen.
2. Press the cursor key “ ▷ ” or “ ◁ ” to increase or decrease the setting value.

   The auto-off timer can be set from 1 to 12 hours.

   If you wish to turn off the timer, press and hold the cursor key “ ▷ or “ ◁ ” until “oFF” sign appears on the screen.
3. Press the set key to exit the machine setting mode.

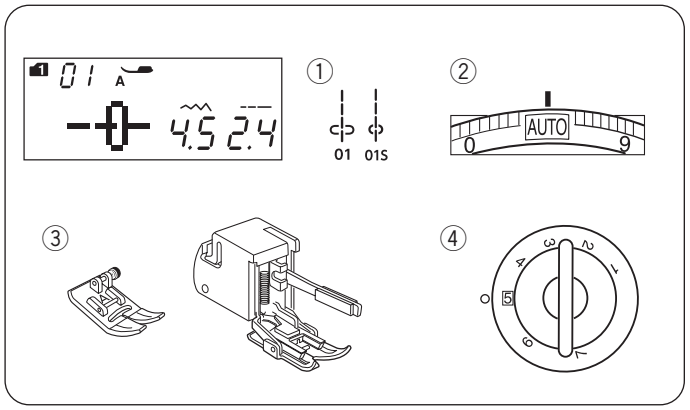

BASIC SEWING

Straight Stitch

Machine settings

①	Pattern:	MODE 1: 01, 01S
②	Thread tension:	AUTO
③	Presser foot:	Zigzag foot A or Even feed foot
④	Foot pressure:	5

NOTE:
When sewing with the even feed foot, be sure to sew at a slow speed.

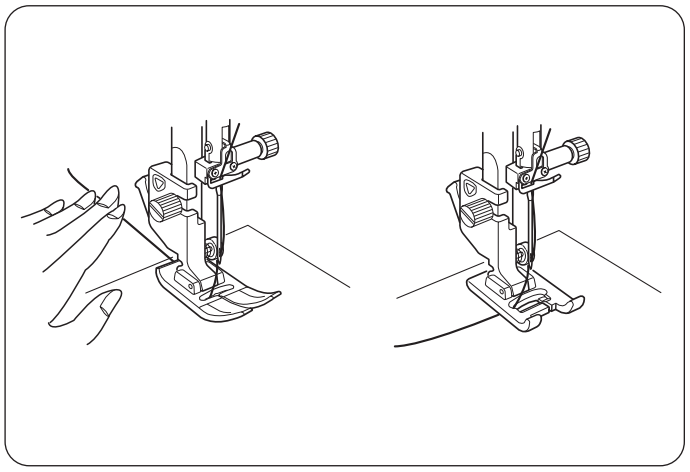

Starting to sew

Raise the presser foot and position the fabric edge next to a seam guide on the needle plate. Lower the needle at the point where you wish to start.

Pull the needle thread toward the rear.
Lower the presser foot.

NOTE:
Pull the needle thread to the left when using satin stitch foot F, even feed foot or automatic buttonhole foot R.

Depress the foot control or press the start/stop button to start sewing.
Gently guide the fabric along the seam guide letting the fabric feed naturally.

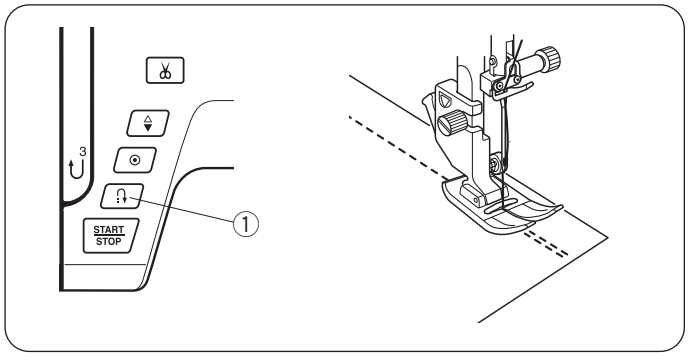

Securing Seams

For fastening the ends of seams, press the reverse button and sew several reverse stitches.
The machine sews in reverse as long as you press and hold the reverse button.

① Reverse button

Press the reverse button once when sewing the lock-a-matic stitch (pattern 02) or locking stitch (pattern 03) and the machine will lock the stitches off and stop automatically.

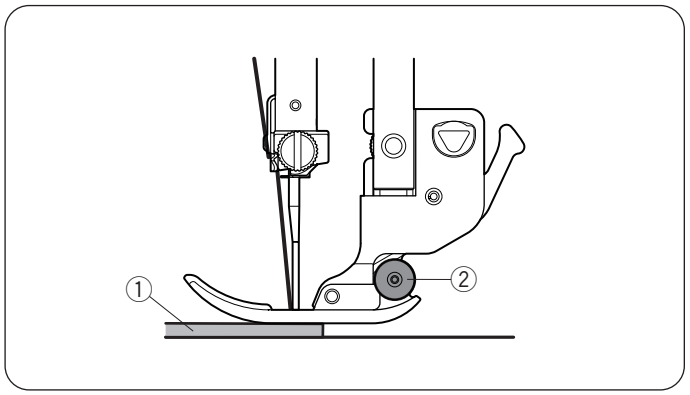

Sewing from the Edge of Thick Fabric

The black button on the zigzag foot locks the foot in the horizontal position.
This is helpful when you start sewing from extreme edge of thick fabrics or sewing across a hem.
Lower the needle into the fabric at the point where you wish to start sewing.
Lower the foot while pushing the black button in. The foot is locked in the horizontal position to avoid slipping.

① Thick fabrics
② Black button

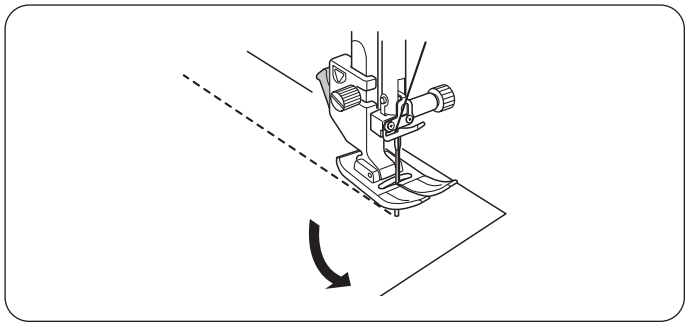

Changing Sewing Direction

Stop the machine.
Raise the presser foot.
Pivot the fabric around the needle to change the sewing direction as desired.
Lower the presser foot and start sewing in a new direction.

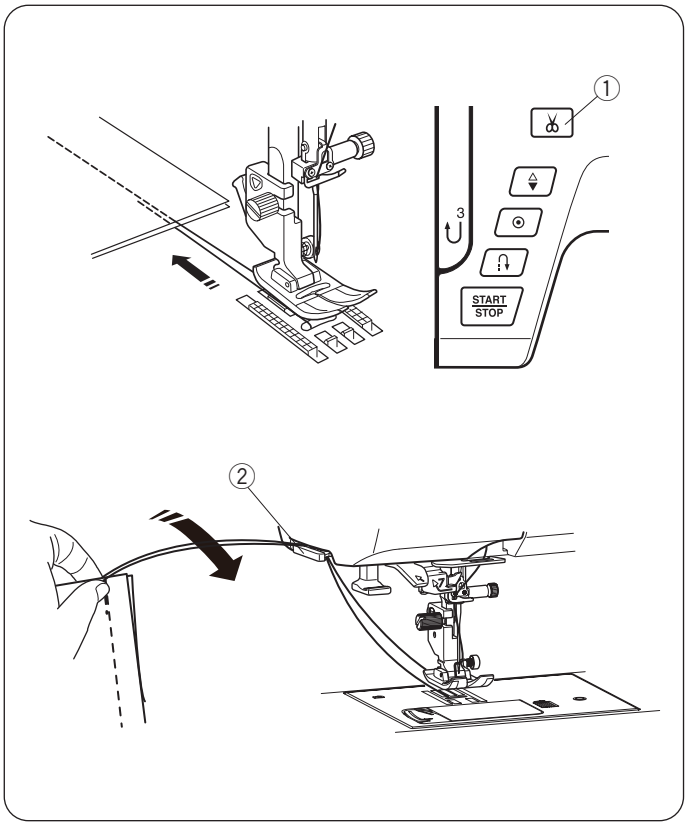

Cutting Threads

To cut the threads after finishing sewing, press the thread cutter button. The needle bar will automatically go up after trimming the threads.

① Thread cutter button

NOTE:
The thread cutter button does not function when the presser foot is up.
Use the thread cutter on the face cover to cut specialized or thick threads if the auto thread cutter does not work well.

To use the thread cutter on the face cover, remove the fabric and draw it to the back.
Pull the threads up and slip them between the thread cutter and face cover from behind.
Pull the threads toward you to cut.

② Thread cutter

NOTE:
Use the thread cutter on the face cover if the thread is #30 or thicker.

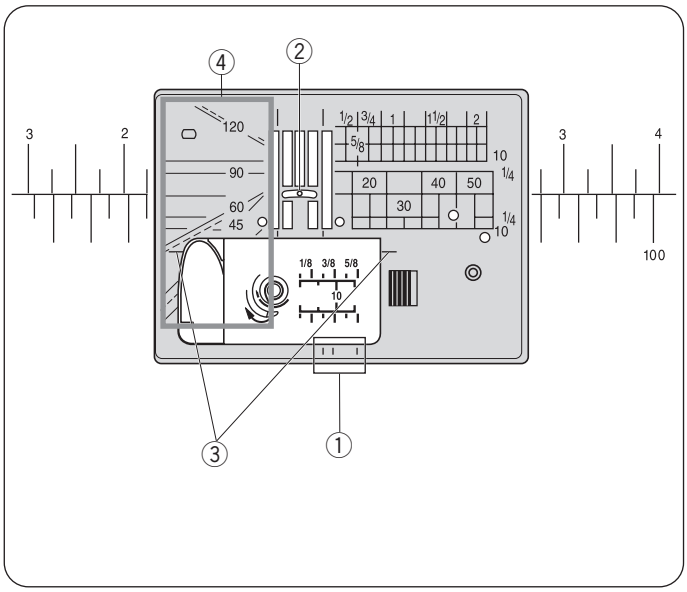

Needle Plate Guides

The seam guides are marked on the needle plate, free arm and hook cover.
The seam guides for 1/4″, 3/8″ and 5/8″ are also marked on the front of the needle plate.

① Seam guides on the front of the needle plate

The numbers on the needle plate indicate the distance from the center needle position in millimeters and inches.

② Center needle position

The cornering guides are very useful when turning a square corner.

③ Cornering guide

The angle scales on the needle plate are useful for patchwork piecing (refer to page 64).

④ Angle scales

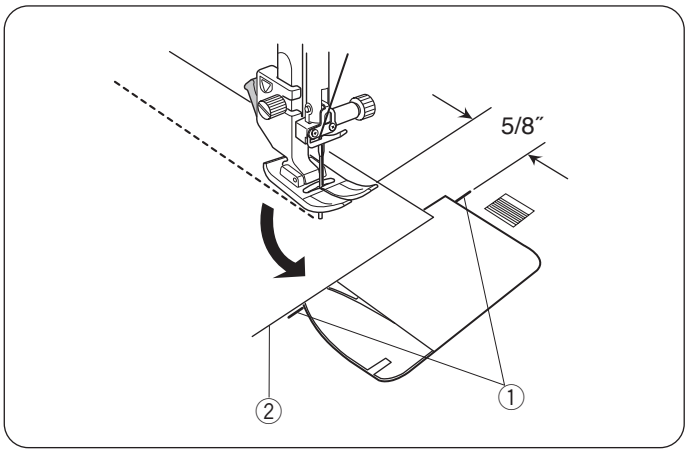

Cornering Guide

To maintain a 5/8″ seam allowance after turning a square corner, use the cornering guide on the needle plate.

Stop sewing when the front edge of fabric reaches the cornering guide lines.

Raise the presser foot and turn the fabric 90 degrees.

Lower the presser foot, and begin stitching in the new direction.

① Cornering guide
② Fabric edge

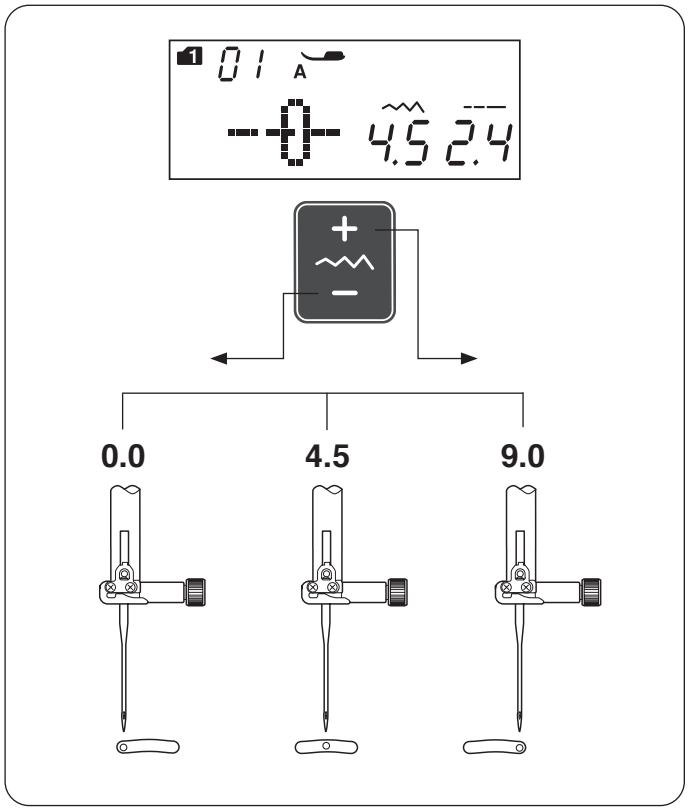

Adjusting the Needle Drop Position

The needle drop position of the straight stitches can be altered by pressing the stitch width adjusting key.

The needle drop position can be adjusted for following straight stitch patterns:

Mode 1:

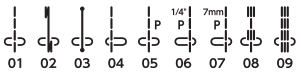

Mode 2:



Press the " + " sign on the stitch width adjusting key to move the needle bar to the right.

Press the " – " sign on the stitch width adjusting key to move the needle bar to the left.

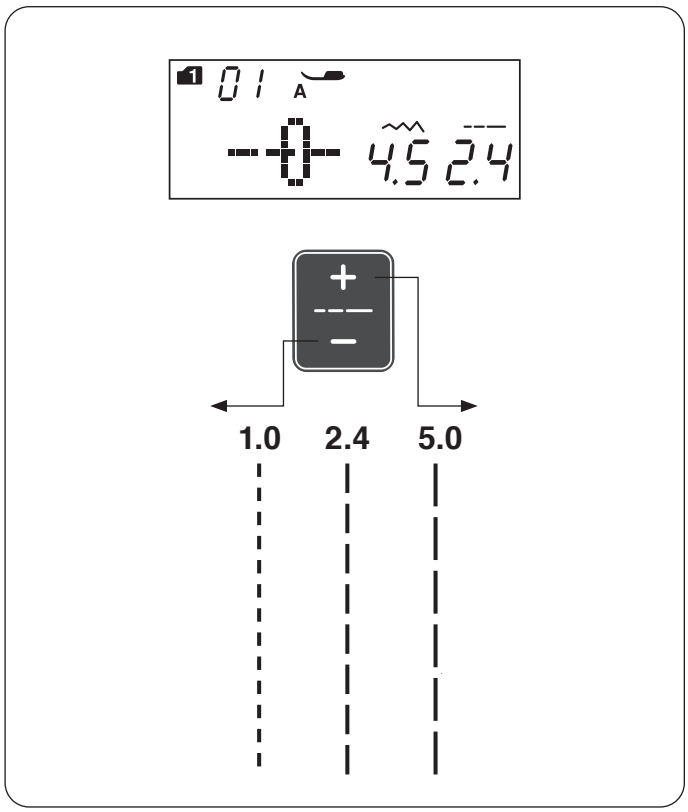

Adjusting the Stitch Length

The stitch length can be altered by pressing the stitch length adjusting key.

The stitch length indication will change as the key is pressed.

Press the " + " sign on the key to increase the stitch length.

Press the " – " sign on the key to decrease the stitch length..

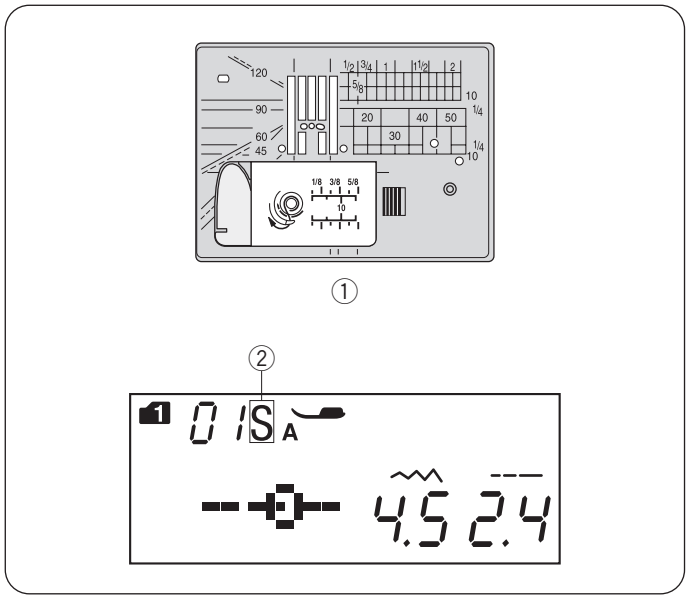

Straight stitch needle plate

The stitch patterns 01-08 (mode 1) can be sewn with the straight stitch needle plate.

Mode 1: 01 02 03 04 05 06 07 08

Replace the needle plate with the straight stitch needle plate (refer to page 16).
"S" mark will appear at the end of the pattern number when the straight stitch needle plate is attached.

① Straight stitch needle plate
② S mark

NOTE:
When the straight stitch needle plate is attached to the machine, the patterns not suitable for the straight stitch needle plate cannot be selected.

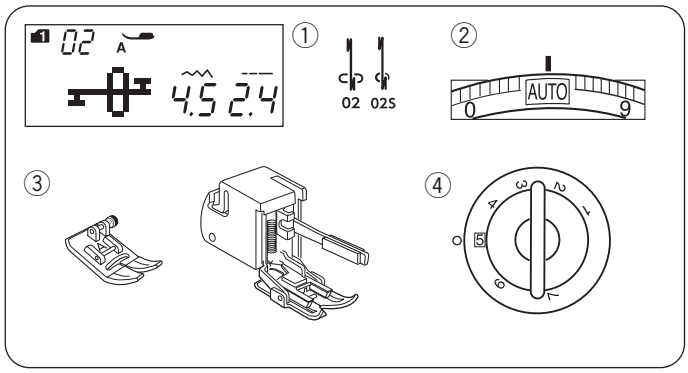

Lock-a-Matic Stitch

Machine settings

①	Pattern:	MODE 1: 02, 02S
②	Thread tension:	AUTO
③	Presser foot:	Zigzag foot A or Even feed foot
④	Foot pressure:	5

NOTE:
When sewing with the even feed foot, be sure to sew at a slow speed.

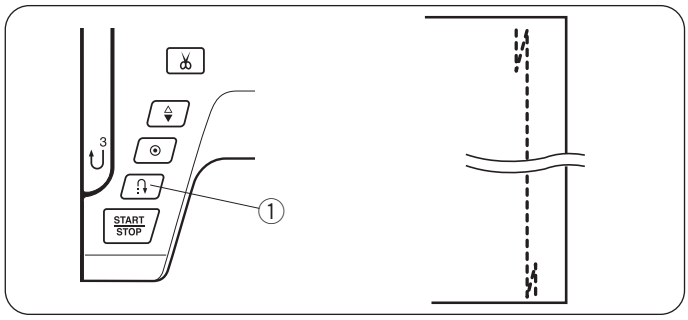

Use this stitch to secure the beginning and the end of a seam with backstitching. When you reach the end of the seam, press the reverse button ① once. The machine will sew four reverse stitches, four forward stitches, and then stop sewing automatically.

① Reverse button

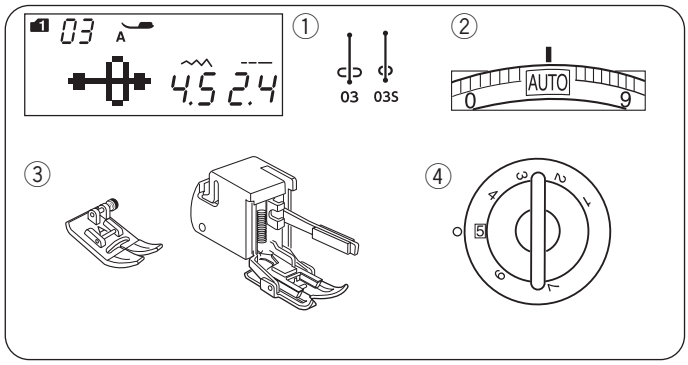

Locking Stitch

Machine settings

①	Pattern:	MODE 1: 03, 03S
②	Thread tension:	AUTO
③	Presser foot:	Zigzag foot A or Even feed foot
④	Foot pressure:	5

NOTE:
When sewing with the even feed foot, be sure to sew at a slow speed.

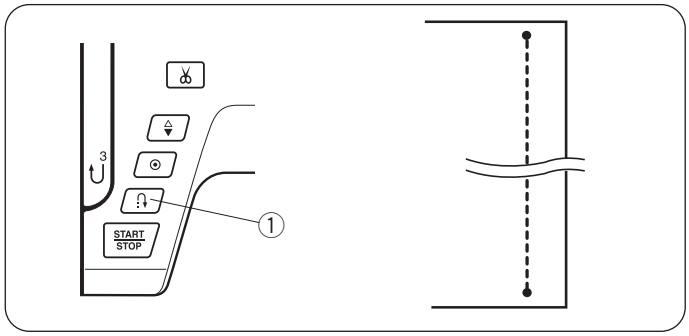

This unique stitch is used where an invisible locking stitch is needed. Lower the needle close to the front edge of the fabric.
The machine will sew several locking stitches in place and continue sewing forward. When you press the reverse button ① at the end of the seam, the machine will sew several locking stitches in place, then stop sewing automatically.

① Reverse button

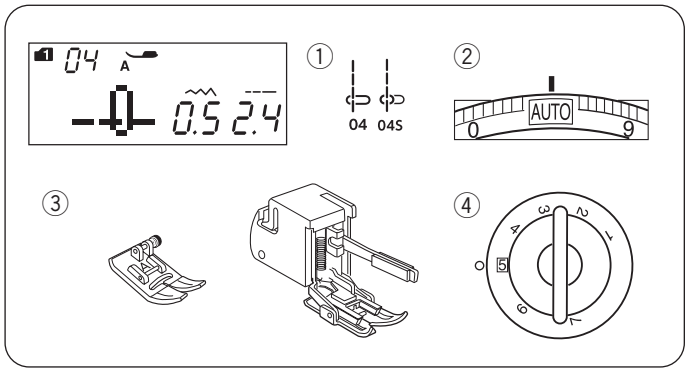

Straight Stitch with Left Needle Position

Machine settings

① Pattern: MODE 1: 04, 04S
② Thread tension: AUTO
③ Presser foot: Zigzag foot A or Even feed foot
④ Foot pressure: 5

NOTE:
When sewing with the even feed foot, be sure to sew at a slow speed.

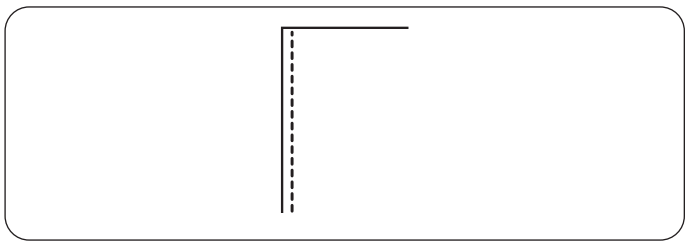

Use this stitch to seam the edge of fabrics.

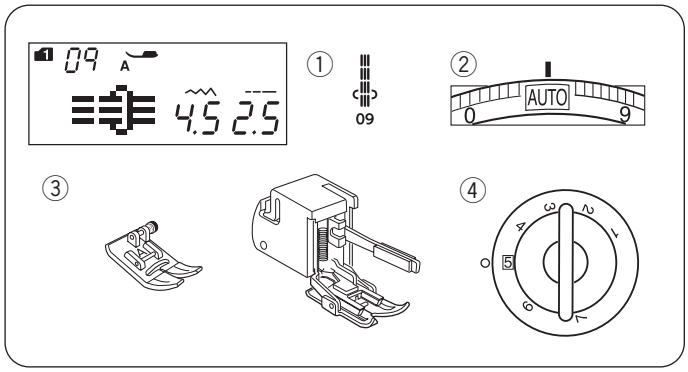

Triple Stretch Stitch

Machine settings

① Pattern: MODE 1: 09
② Thread tension: AUTO
③ Presser foot: Zigzag foot A or Even feed foot
④ Foot pressure: 5

NOTE:
When sewing with the even feed foot, be sure to sew at a slow speed.

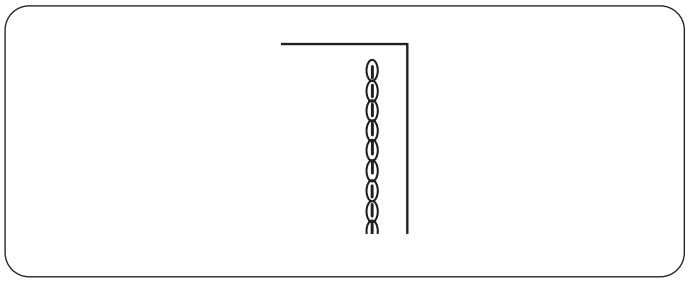

This strong, durable stitch is recommended for areas where both elasticity and strength are needed to ensure comfort and durability. Use it to reinforce areas such as crotch and armhole seams. Also use it when constructing items such as backpacks for extra strength.

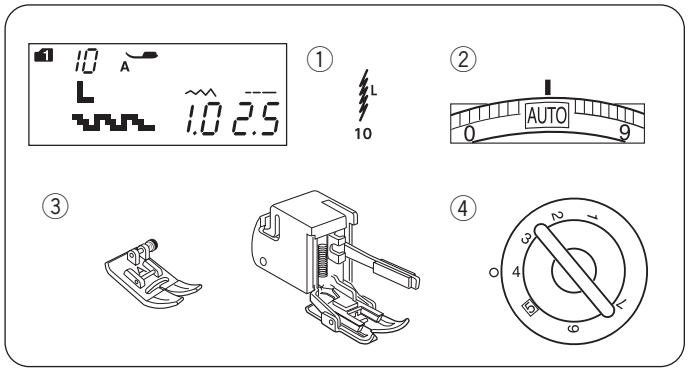

Knit Stitch

Machine settings

① Pattern: MODE 1: 10
② Thread tension: AUTO
③ Presser foot: Zigzag foot A or Even feed foot
④ Foot pressure: 4

NOTE:
When sewing with the even feed foot, be sure to sew at a slow speed.

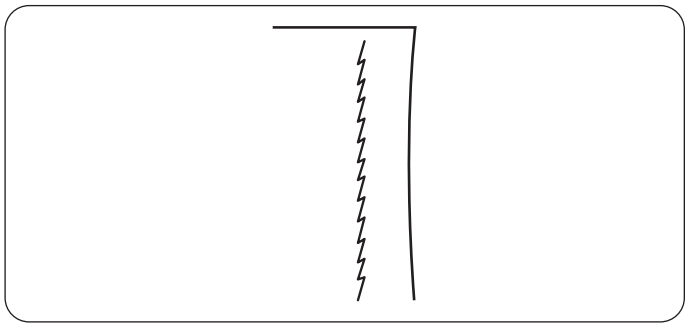

This is a narrow stretch stitch in the left needle position designed to eliminate puckering on knit fabrics and bias seams, while permitting the seam to be pressed completely open flat.

Use this stitch when seaming thin fabrics such as tricot and fine jersey.

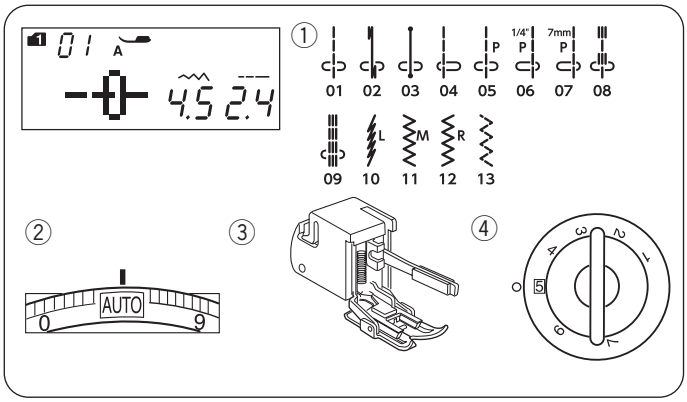

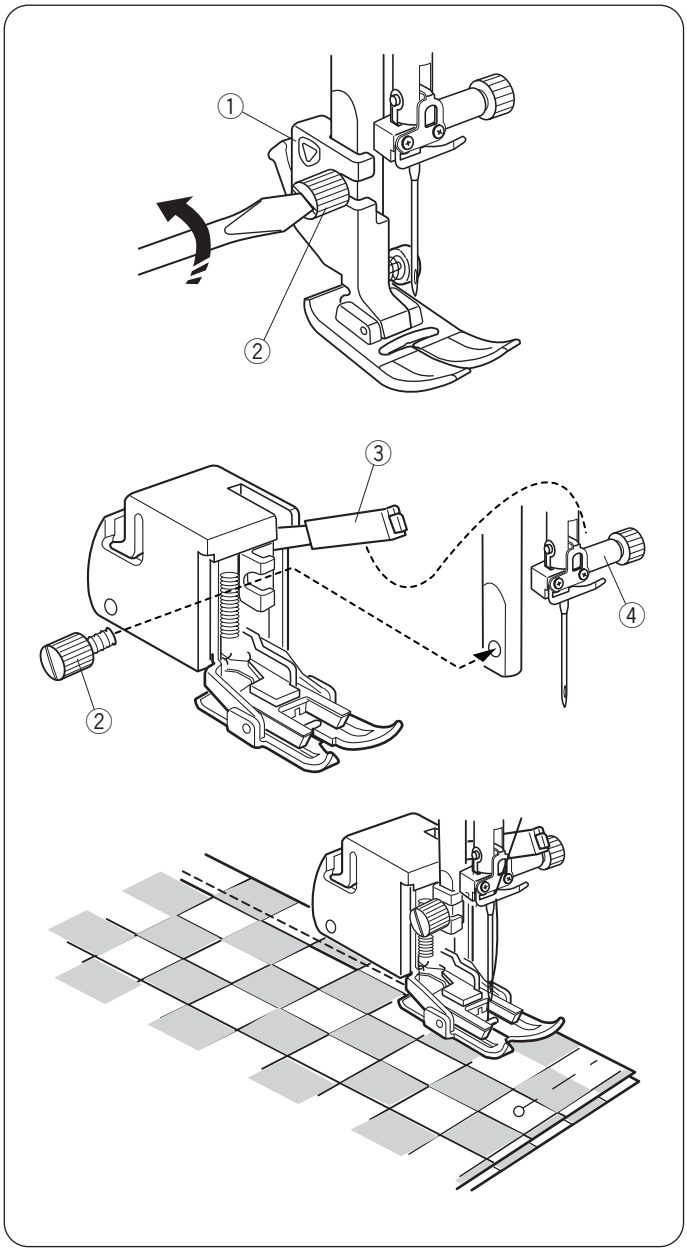

Sewing with Even Feed Foot (Walking Foot)

Machine settings

①	Pattern:	MODE 1: 01-13
②	Thread tension:	AUTO
③	Presser foot:	Even feed foot
④	Foot pressure:	5

⚠ CAUTION:
Always make sure to press the lockout key to lockout the machine or turn the power switch OFF before replacing the presser foot.

Even feed foot (walking foot) is a special attachment for hard-to-feed materials. This foot prevents the fabric from slipping or puckering by feeding fabrics with upper and lower feed dogs. Even feed foot is great for fine fabrics, knits, leather and matching plaids.

Attaching the even feed foot

Loosen the thumbscrew and remove the foot holder. Attach the even feed foot to the presser bar with the lever above the needle clamp, and secure it with the thumbscrew.

① Foot holder
② Thumbscrew
③ Lever
④ Needle clamp

NOTE:
When sewing with the even feed foot, be sure to sew at a slow speed.

Sewing

Place the fabric under the foot and lower the needle at the point where you wish to start.
Be sure to sew at a slow speed.

When seaming plaid fabrics, match the plaids of the upper and lower layers and pin them together.
Remove the pins as you sew.

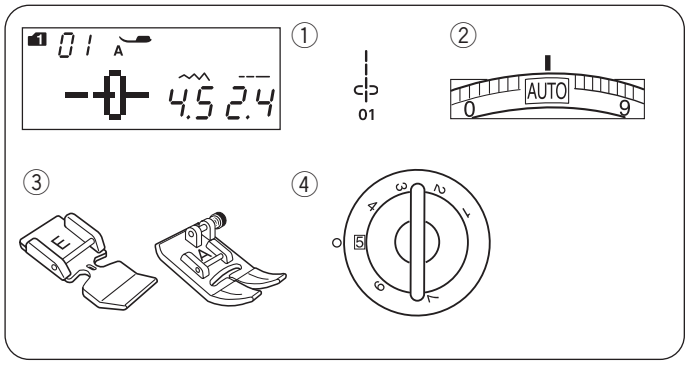

Zipper Sewing

Machine settings

①	Pattern:	MODE 1: 01
②	Thread tension:	AUTO
③	Presser foot:	Zipper foot E Zigzag foot A
④	Foot pressure:	5

NOTE:
The needle drop position should be adjusted when sewing with the zipper foot E.

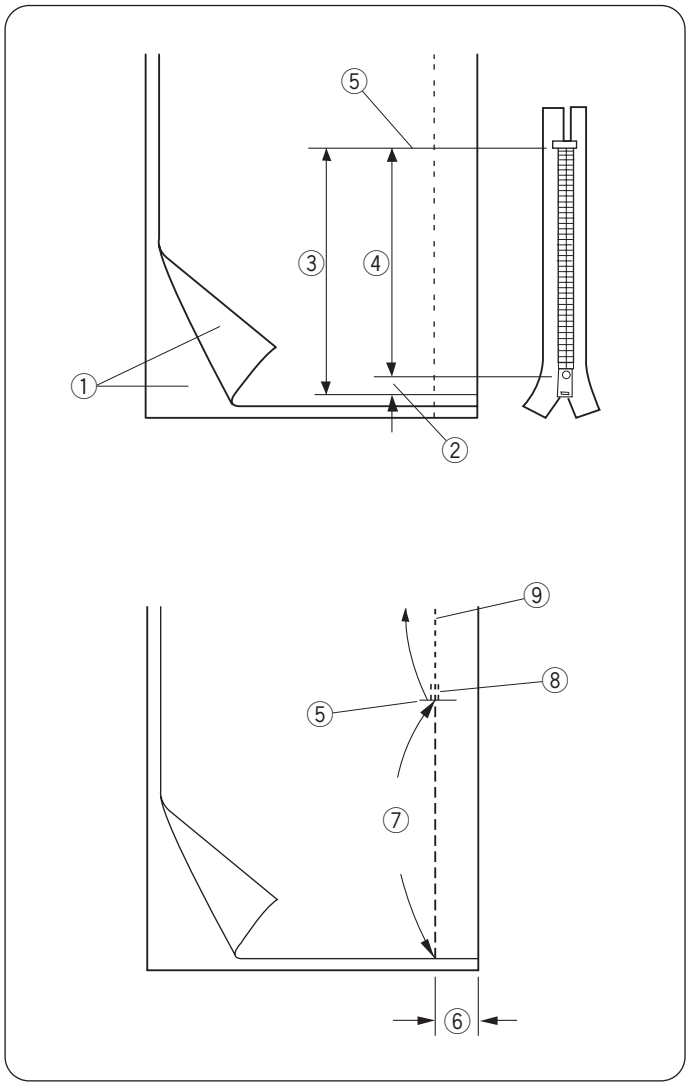

Fabric preparation

Add 1 cm (3/8″) to the zipper size. This is the overall opening size.

① Right sides of the fabric
② 1 cm (3/8″)
③ Opening size
④ Zipper size
⑤ End of the zipper opening

Place the right sides of the fabric together and sew to the end of the opening with a 2 cm (5/8″) seam allowance. Reverse stitch to lock the seams.
Manually increase the stitch length to 5.0 and baste the zipper opening with the thread tension loosened to 1-3.

⑤ End of the zipper opening
⑥ 2 cm (5/8″) seam allowance
⑦ Basting
⑧ Reverse stitches
⑨ Seam stitches

Sewing

1 Fold back the left seam allowance. Turn the right seam allowance under to form a 0.2 cm to 0.3 cm (1/8″) margin. Place the zipper teeth next to the fold and pin in place.

Set the stitch length and thread tension back to the original setting.

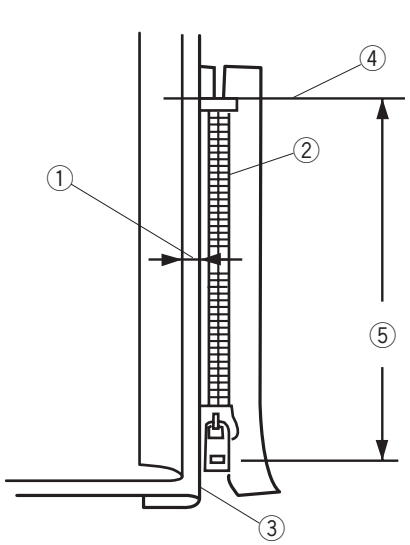

① 0.2 cm to 0.3 cm (1/8″) margin
② Zipper teeth
③ Fold
④ End of the zipper opening
⑤ Opening size

2 Attach the zipper foot E.

Adjust the stitch width to 7.5-8.5.

Lower the foot onto the topside at the end of the zipper opening so that the needle pierces the fabric next to the fold and the zipper tape.

Sew along the zipper guiding the zipper teeth along the side edge of the foot.

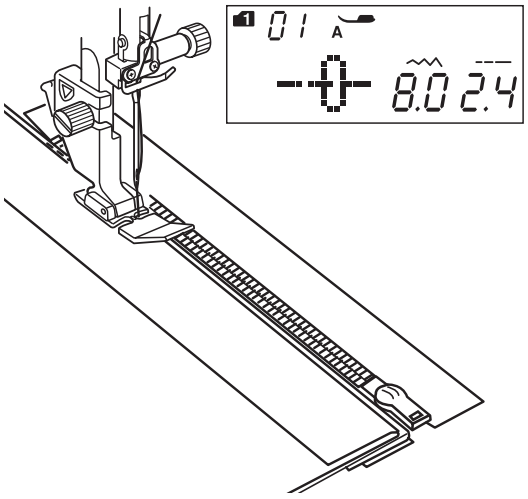

⚠ CAUTION:

Be sure that the needle does not strike the presser foot or zipper teeth when the zipper foot is attached and stitch width is adjusted.

3 Sew through all layers next to the fold.

Stop 5 cm (2″) before zipper foot E reaches the slider on the zipper tape.

Lower the needle slightly into the fabric.

Raise the foot and open the zipper to clear the slider.

Lower the foot and stitch the remainder of the seam.

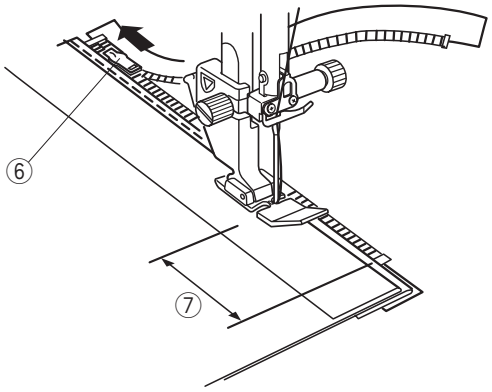

⑥ Slider
⑦ 5 cm (2″)

4

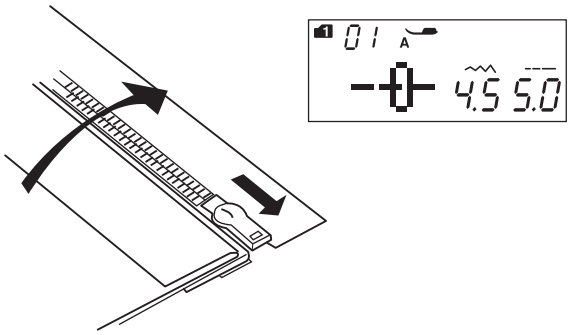

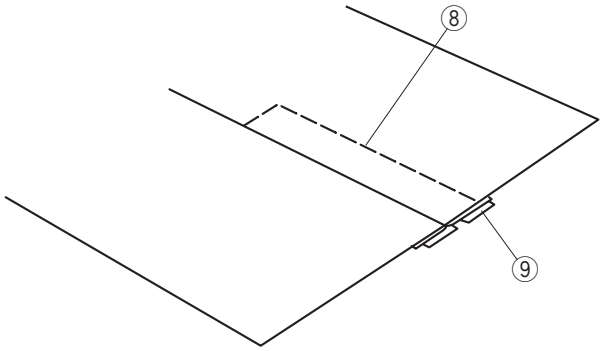

4 Close the zipper and spread the fabric open flat with the right side facing up.

Attach the zigzag foot A.

Adjust the stitch length to 5.0, stitch width to 4.5 (default value) and thread tension dial to 1.

Baste the opened fabric and zipper tape together.

⑧ Basting
⑨ Zipper tape

5 6

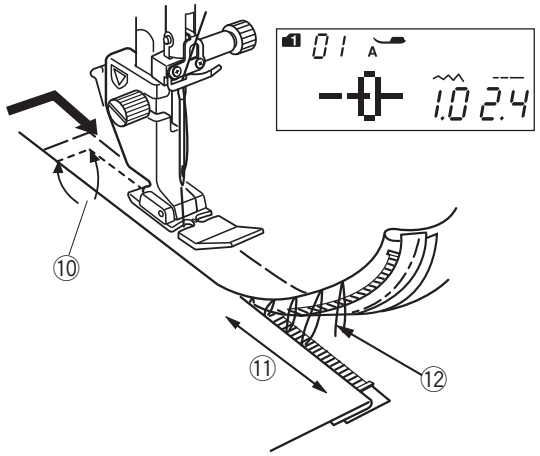

5 Attach the zipper foot E.

Adjust the stitch length to default value, stitch width to 0.5-1.5, thread tension dial to “AUTO”.

Backstitch across the end of the opening 0.7 cm to 1 cm (3/8″) and turn the fabric 90 degrees.

⑩ 0.7 cm to 1 cm (3/8″)

⚠ CAUTION:

Be sure that the needle does not strike the presser foot or zipper teeth when the zipper foot is attached and stitch width is adjusted.

6 Stitch through the garment and zipper tape, guiding the zipper teeth along the side edge of the foot.

Stop about 5 cm (2″) from the top of the zipper.

Unfasten the basting stitches.

Lower the needle into the fabric, raise the foot, and open the zipper.

⑪ 5 cm (2″)
⑫ Basting stitches

7

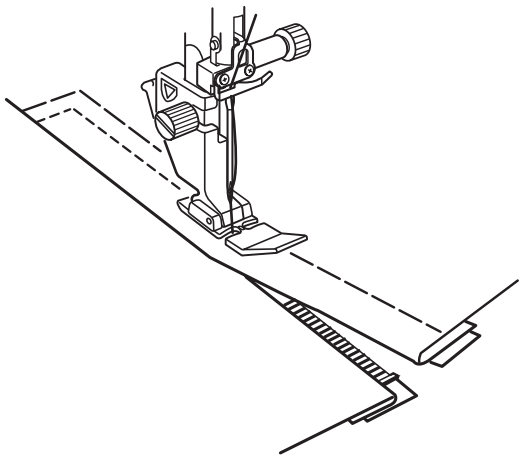

7 Lower the foot and stitch the remainder of the seam, making sure the fold is even.

Remove the basting threads after seaming.

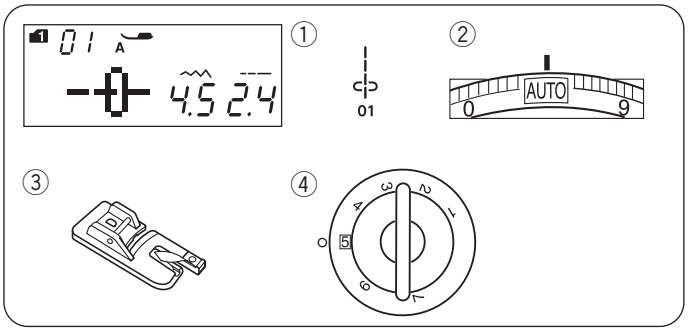

Rolled Hem

Machine settings

① Pattern: MODE 1: 01
② Thread tension: AUTO
③ Presser foot: Rolled hem foot D
④ Foot pressure: 5

Sewing

1

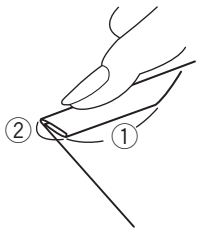

1 Fold the edge of the fabric twice, 6 cm (2-3/8″) in length and 0.3 cm (1/8″) in width.

① 6 cm (2-3/8″)
② 0.3 cm (1/8″)

2

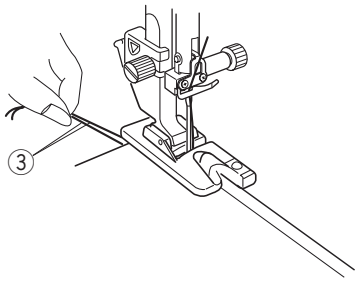

2 Place the fabric aligning the edge of the hem with the guide on the foot.

Lower the foot and sew 1 cm - 2 cm (1/2″-1″) while pulling both thread to the back.

③ Threads

3

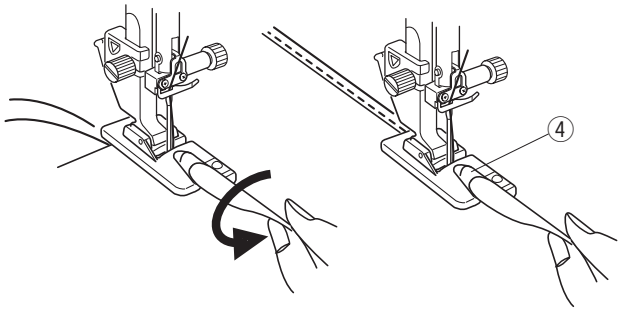

3 Stop the machine and lower the needle into the fabric.

Raise the foot and insert the folded portion of the fabric into the curl of the foot.

Lower the foot, and then sew by lifting up the edge of the fabric to keep it feeding smoothly and evenly.

④ Curl of the foot

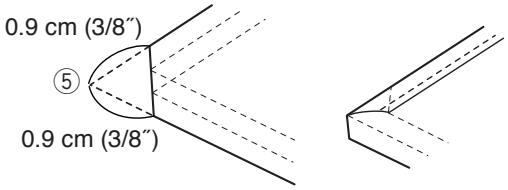

NOTE:
Trim the corner 0.9 cm (3/8″) to reduce bulk.
⑤ 0.9 cm (3/8″)

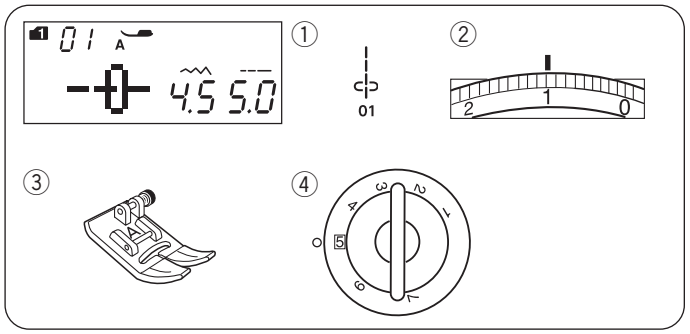

Gathering

Machine settings

① Pattern: MODE 1: 01
② Thread tension: 1
③ Presser foot: Zigzag foot A
④ Foot pressure: 5

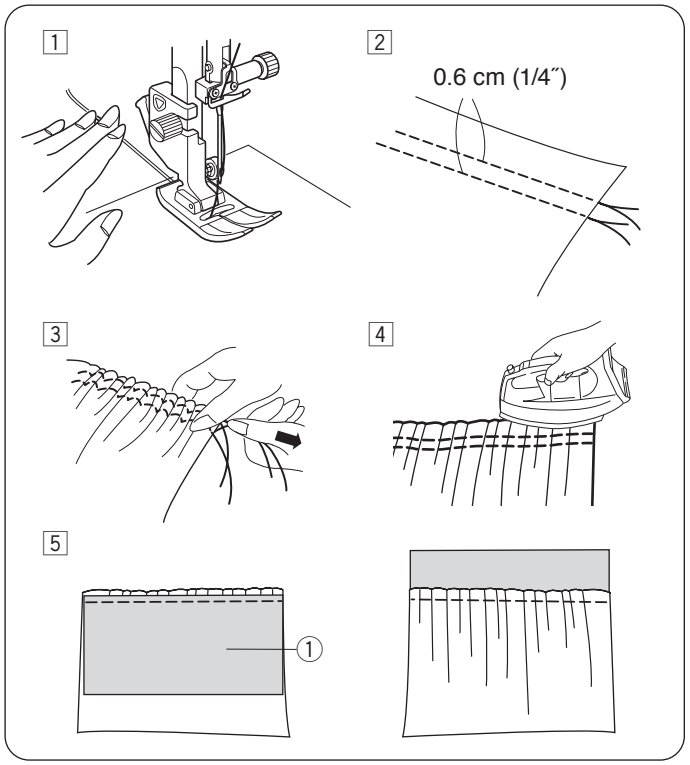

1 Loosen the thread tension to “1” and increase the stitch length to 5.0.

Pull both threads 10 cm (4″) under and behind the presser foot (refer to page 23).

2 Sew two rows of straight stitches 0.6 cm (1/4″) apart.

Knot the threads at the beginning.

3 Pull the bobbin threads at the end to gather the fabric.

4 Knot the threads at the end and distribute the gathers evenly.

5 Prepare the fabric to attach the gathering.
Tighten the thread tension to “AUTO” and decrease the stitch length to “2.4” (default settings).
Place the wrong side of the fabric under the gathering.

① Wrong side of the fabric

Sew the straight stitch between the two gathering rows.
Remove the two rows of straight stitches.

NOTE:
You may sew the straight stitch under the two gathering rows to cover the remains of gathering rows.

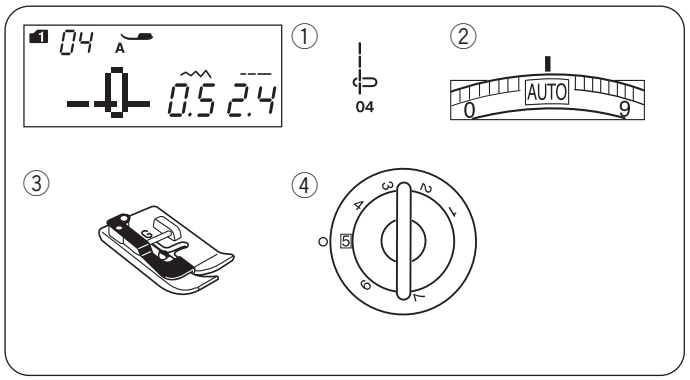

Pintucking

Machine settings

① Pattern: MODE 1: 04
② Thread tension: AUTO
③ Presser foot: Blind hem foot G
④ Foot pressure: 5

NOTE:
The “A” foot is displayed on the LCD when straight stitch pattern 04 (mode 1) is selected. However, use blind hem foot G when sewing pintuck.

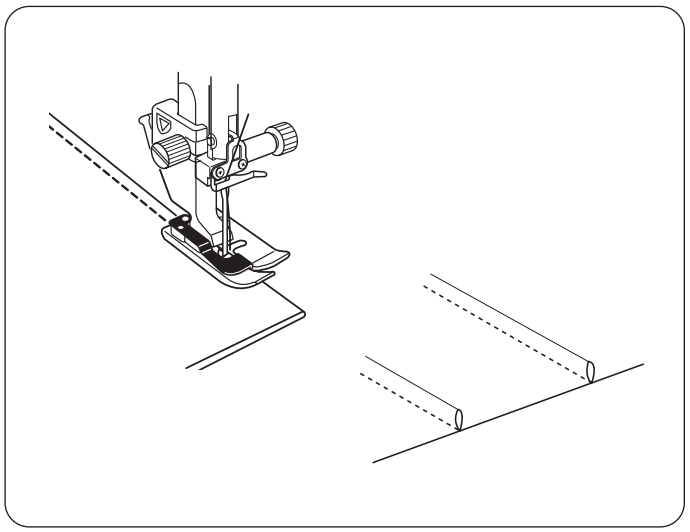

Fold the fabric with the wrong sides together.
Place the folded fabric under the blind hem foot.
Align the edge of the fold with the guide on the foot, and lower the foot.
Sew while guiding the edge of the fold along the guide.

Open the fabric and press the tuck to one side.

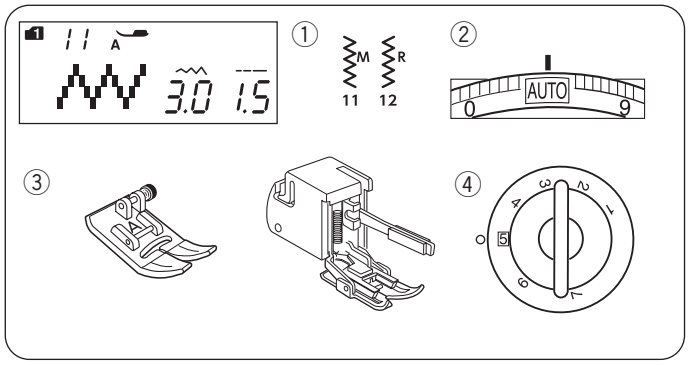

Zigzag Stitch

Machine settings

① Pattern: MODE 1: 11, 12
② Thread tension: AUTO
③ Presser foot: Zigzag foot A or Even feed foot
④ Foot pressure: 5

NOTE:
When sewing with the even feed foot, be sure to sew at a slow speed.

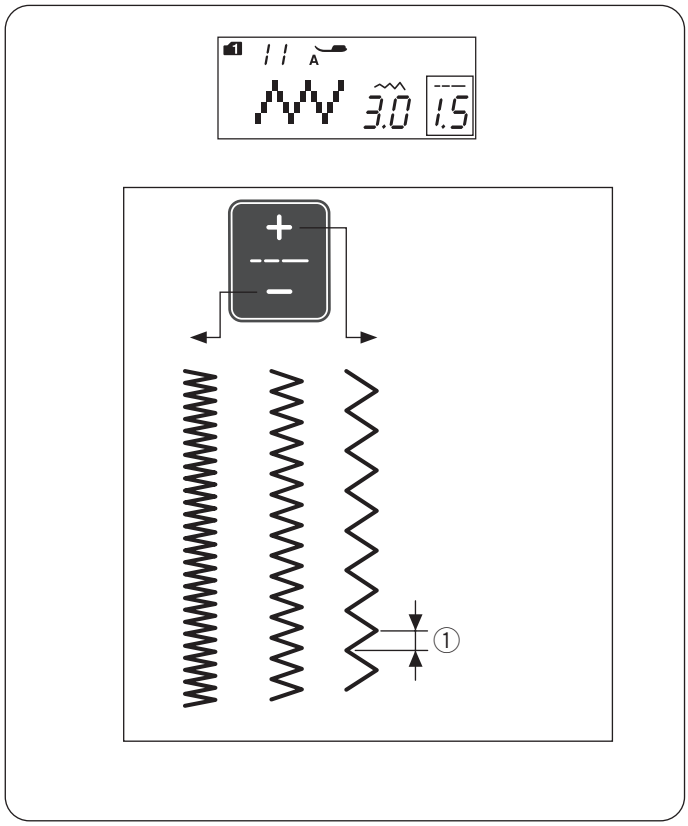

Zigzag stitch is used for various sewing needs including overcasting. It can be used on most woven fabrics.
A dense zigzag stitch can also be used for applique.

Adjusting the stitch length

The stitch length of the zigzag stitches can be altered by pressing the stitch length adjusting key.

Press the " + " sign on the stitch length adjusting key to increase the stitch length.

Press the " – " sign on the stitch length adjusting key to decrease the stitch length.

① Stitch length

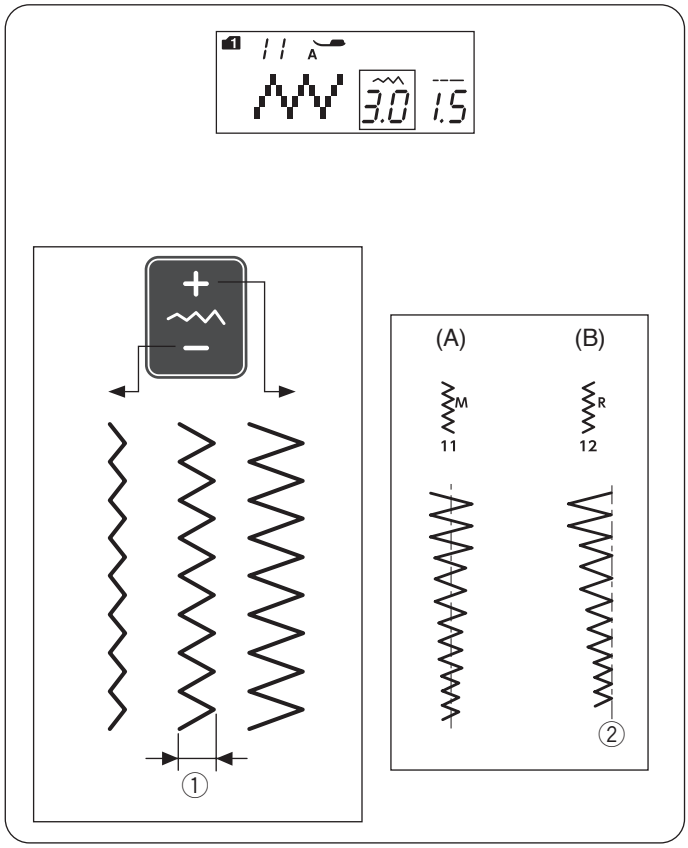

Adjusting the stitch width

The stitch width of the zigzag stitches can be altered by pressing the stitch width adjusting key.

Press the " + " sign on the stitch width adjusting key to increase the stitch width.
Press the " – " sign on the stitch width adjusting key to decrease the stitch width.

① Stitch width

(A): The pattern number 11 (mode 1) has a fixed center needle drop position. The stitch width changes symmetrically.

(B): The pattern number 12 (mode 1) has a fixed right needle drop position. When you change the stitch width, the left needle drop position will change.

② Fixed right needle position

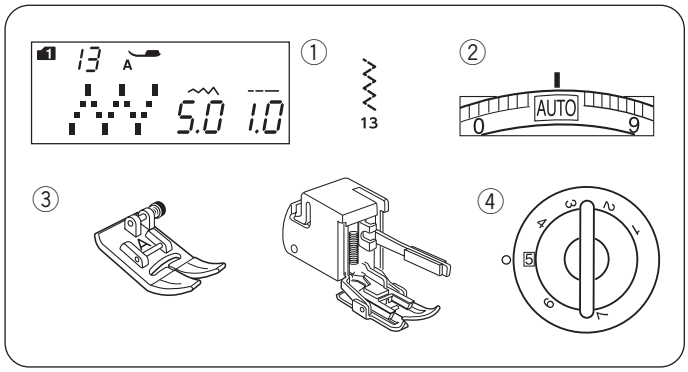

Multiple Zigzag Stitch (Tricot Stitch)

Machine settings

① Pattern: MODE 1: 13
② Thread tension: AUTO
③ Presser foot: Zigzag foot A or Even feed foot
④ Foot pressure: 5

NOTE:
When sewing with the even feed foot, be sure to sew at a slow speed.

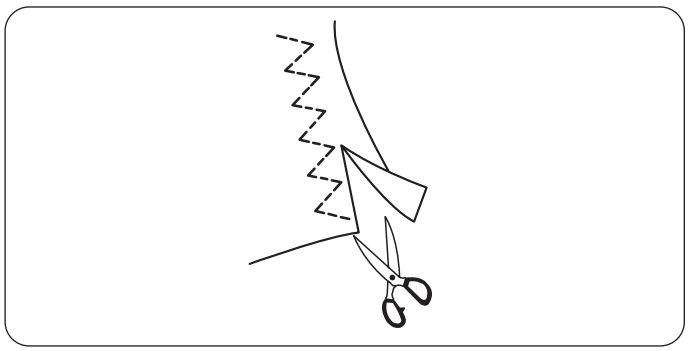

This stitch is used to finish a raw edge of synthetics and other stretch fabrics that tend to pucker.
Sew along the fabric edge leaving an adequate seam allowance.
After sewing, trim the seam allowance close to the stitches.

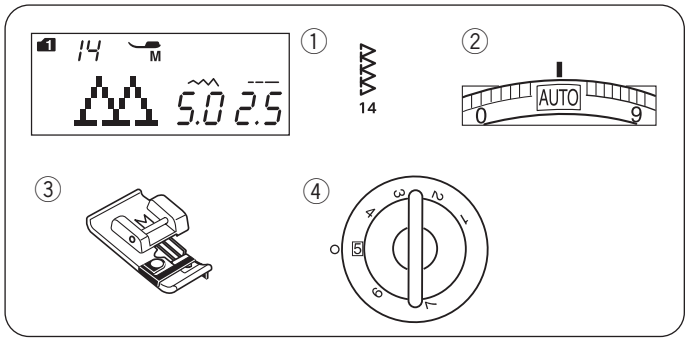

Overcasting Stitch

Machine settings

① Pattern: MODE 1: 14
② Thread tension: AUTO
③ Presser foot: Overcasting foot M
④ Foot pressure: 5

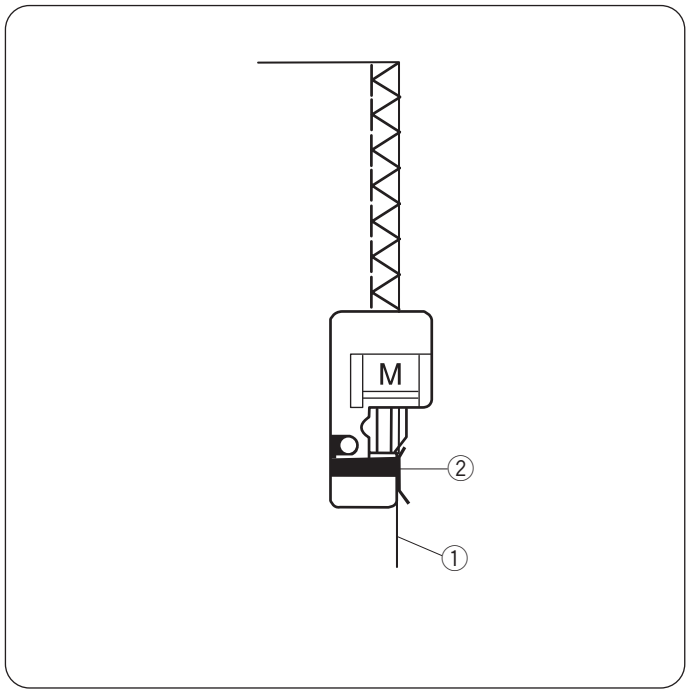

This stitch can be used to simultaneously seam and overcast edges of fabrics.
Use this stitch when you do not need to open seams flat.

Place the fabric edge next to the guide of the foot and then sew.

① Edge of fabric
② Guide

NOTE:
The stitch width cannot be changed.

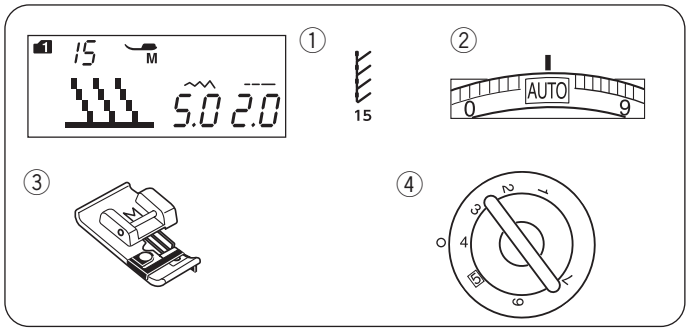

Knit Stitch

Machine settings

① Pattern: MODE 1: 15
② Thread tension: AUTO
③ Presser foot: Overcasting foot M
④ Foot pressure: 4

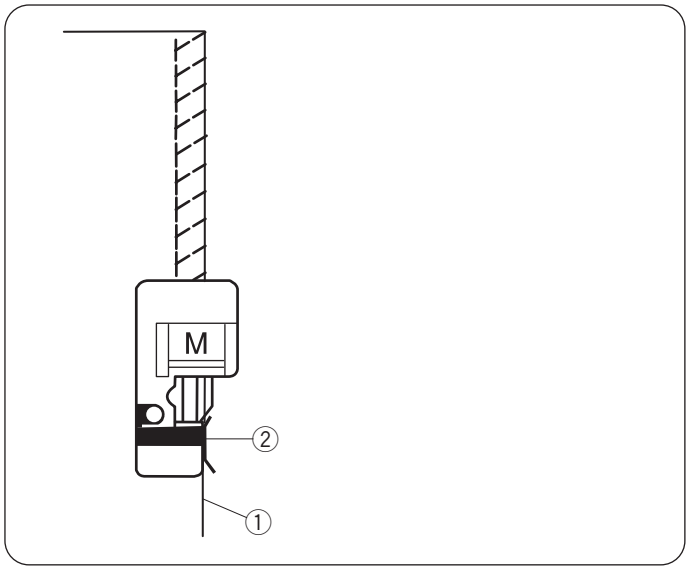

This stitch is recommended for sewing such fabrics as synthetic knits and stretch velour as it provides the greatest amount of elasticity and strength.
Place the fabric edge next to the guide of the foot and then sew.

① Edge of fabric
② Guide

NOTE:
The stitch width cannot be changed.

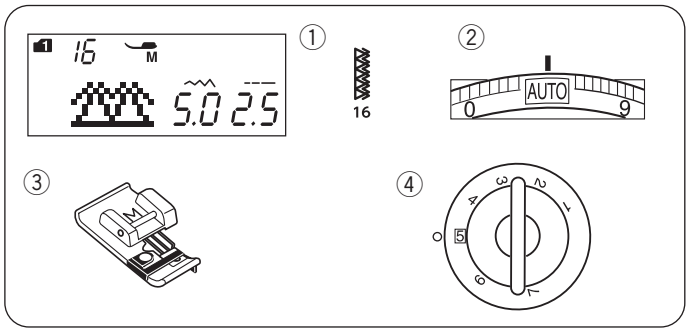

Double Overcasting Stitch

Machine settings

① Pattern: MODE 1: 16
② Thread tension: AUTO
③ Presser foot: Overcasting foot M
④ Foot pressure: 5

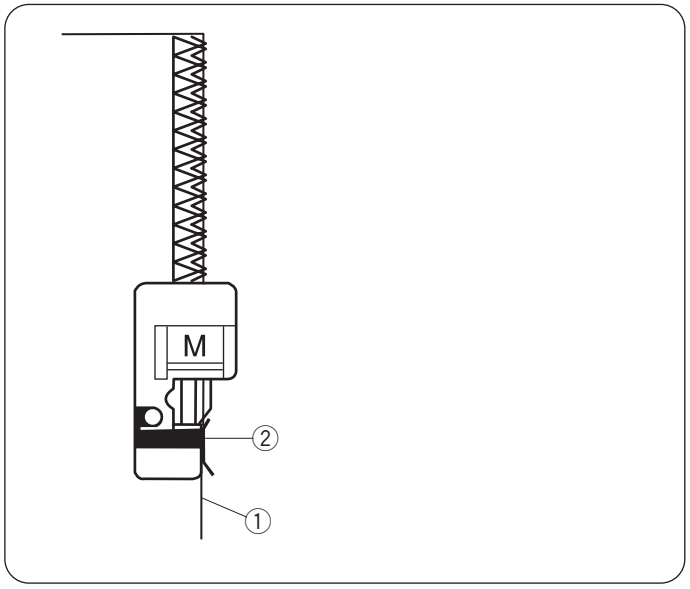

This is an excellent stitch for fabrics that tend to fray extensively such as linens and gabardines.
Two rows of zigzag stitches are simultaneously sewn over the edge to insure that fabric will not ravel.
Place the fabric edge next to the guide of the foot and then sew.

① Edge of fabric
② Guide

NOTE:
The stitch width cannot be changed.

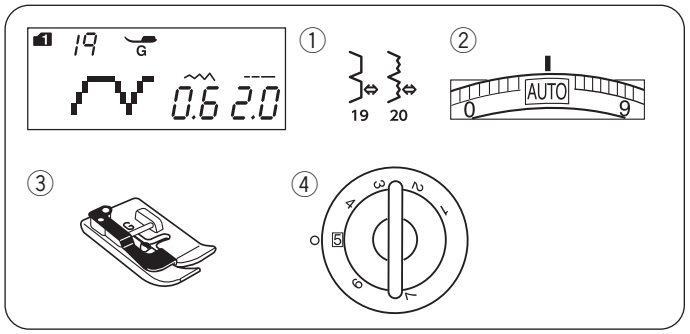

Blind Hemming

Machine settings

①	Pattern:	MODE 1: 19, 20
②	Thread tension:	AUTO
③	Presser foot:	Blind hemming foot G
④	Foot pressure:	5

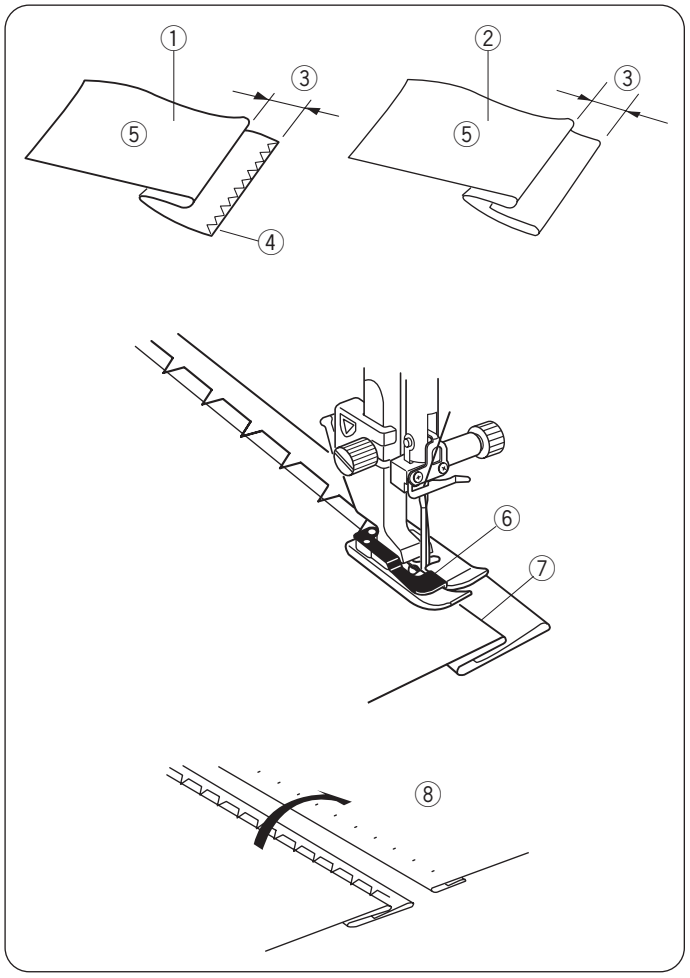

Select pattern 19 for woven fabrics or pattern 20 for elastic fabrics.

Folding the fabric

Fold the fabric to make a hem as shown.

① Heavy fabric
② Fine to medium fabric
③ 0.4 cm to 0.7 cm (3/16″ to 1/4″)
④ Overcasting
⑤ Wrong side of fabric

Sewing

Position the fabric so that the fold comes to the left side of the guide on the foot.
Lower the presser foot.
Adjust the position of the needle swing with the stitch width adjusting key so that the needle just pierces the folded edge of the fabric when the needle comes over to the left side.

Sew guiding the fold along the guide.

⑥ Guide on the foot
⑦ Fold

Open the fabric with the right side up.
The stitches on the right side of the fabric will be almost invisible.

⑧ Right side of fabric

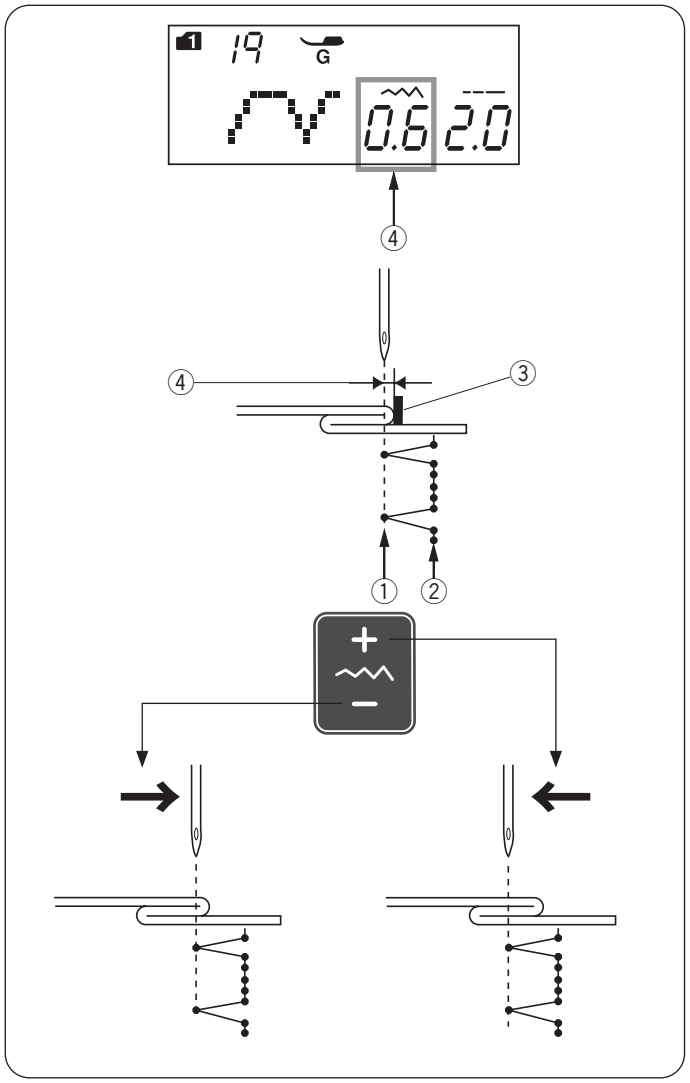

Changing the needle drop position

Press the stitch width adjusting key.
The LCD screen shows the distance between the left needle position and the guide in millimeters ④.

Press the " – " sign to move the needle to the right.
Press the " + " sign to move the needle to the left.

① Left needle drop position
② Right needle drop position
③ Guide on foot
④ Distance between the left needle position and the guide

NOTE:
The stitch width of patterns 19 (mode 1) and 20 (mode 1) cannot be changed, but the needle drop position will move.

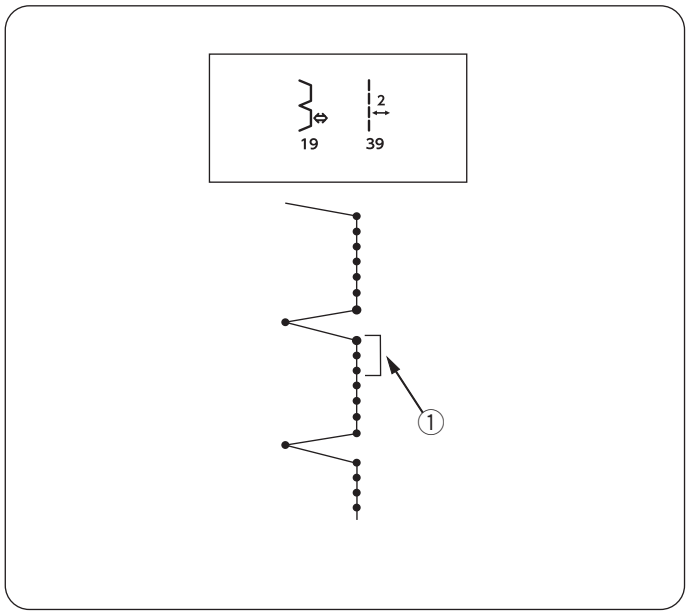

Making the straight stitches in pattern number 19 longer

Program a combination of patterns 19 (mode 1) and pattern 39 (mode 2).

Two straight stitches will be added to the blind hem stitch when combining with pattern 39 (mode 2) ① (refer to page 75).

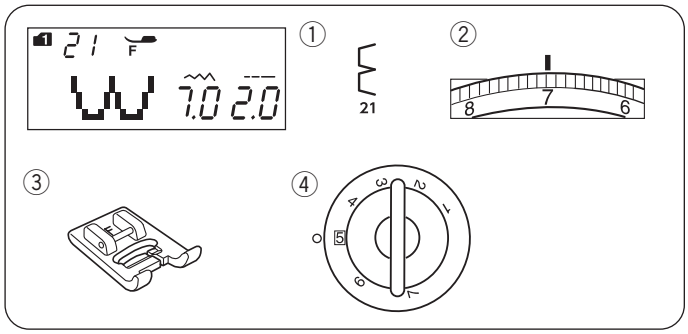

Shell Tuck

Machine settings

①	Pattern:	MODE 1: 21
②	Thread tension:	6-8
③	Presser foot:	Satin stitch foot F
④	Foot pressure:	5

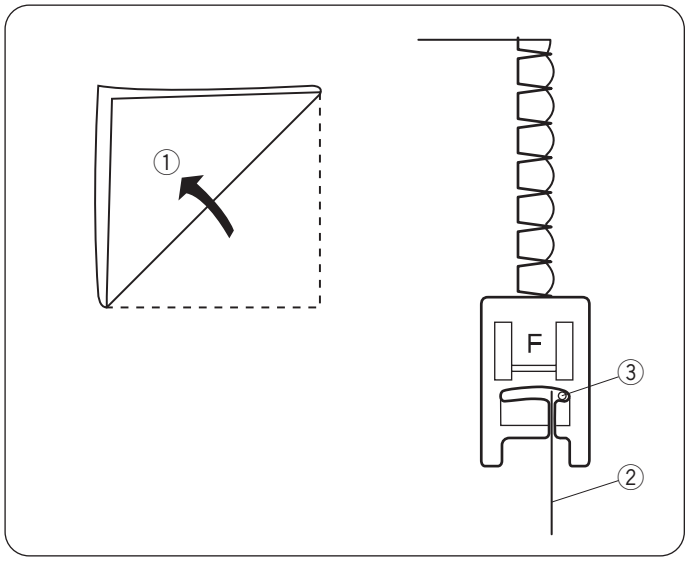

Use a light weight fabric (tricot, for example). Fold the fabric as shown and stitch on the fold.

Allow the needle to just clear the folded edge to create a shelled edge. You may need to increase the needle thread tension.

① Bias
② Folded edge
③ Right needle drop position

If you sew rows of shell stitches, space the rows at least 1.5 cm (5/8″) apart.
You can also sew shell stitches on knits or soft silky woven fabrics in any direction.

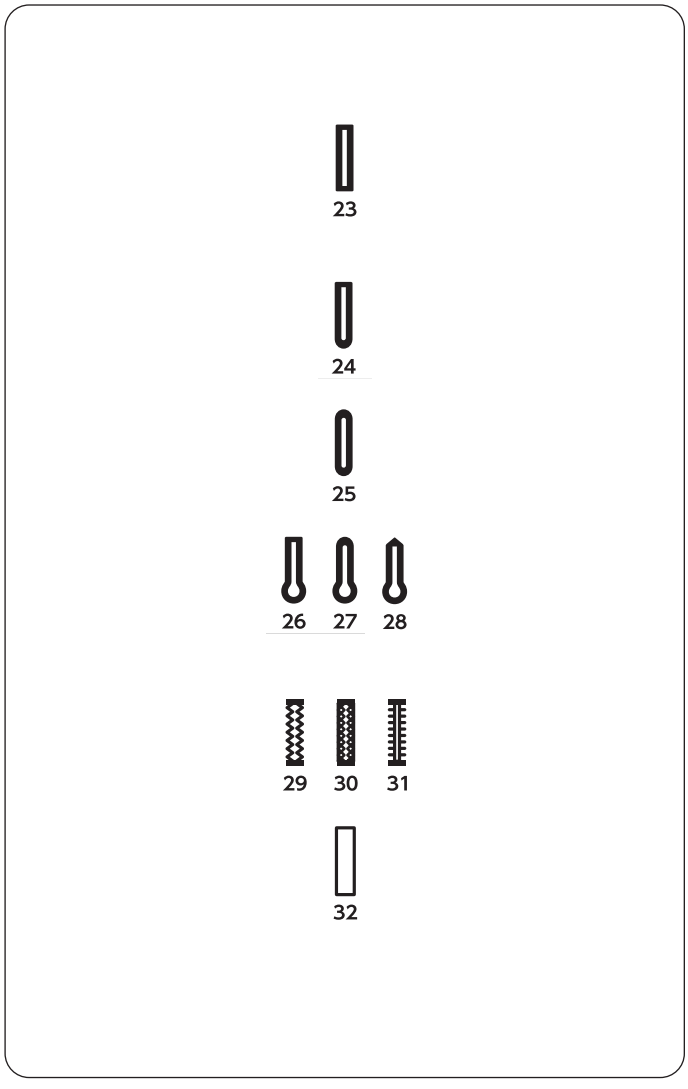

Buttonholes

Variety of buttonholes

23 Square buttonhole
This square buttonhole is widely used on medium to heavy weight fabrics.
The buttonhole size is automatically determined by placing a button in the foot.

24 Round end buttonhole
This buttonhole is used on fine to medium weight fabrics especially for blouses and children's clothes.

25 Fine fabric buttonhole
This buttonhole is rounded at both ends and is used on fine, delicate fabrics such as fine silk.

26-28 Keyhole buttonholes
The Keyhole buttonhole is widely used on medium to heavy weight fabrics. It is also suitable for larger and thicker buttons.

29-31 Stretch buttonholes
This buttonhole can be used on stretch fabrics. It can also be used as a decorative buttonhole.

32 Welted buttonhole
This is a template pattern for the hand sewn welted (bound) buttonhole.

NOTE:
Sewing procedure of patterns 24-32 is the same as pattern number 23.

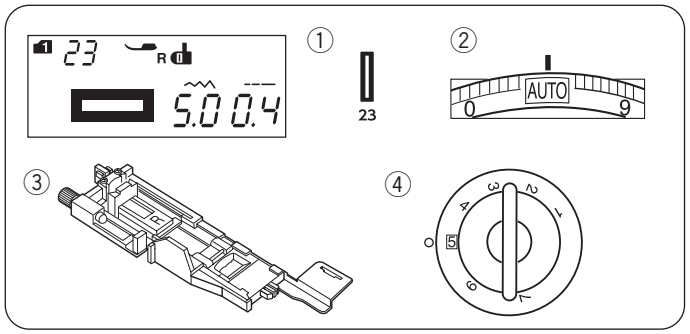

Square Buttonhole

Machine settings

①	Pattern:	MODE 1: 23
②	Thread tension:	AUTO
③	Presser foot:	Automatic buttonhole foot R
④	Foot pressure:	5

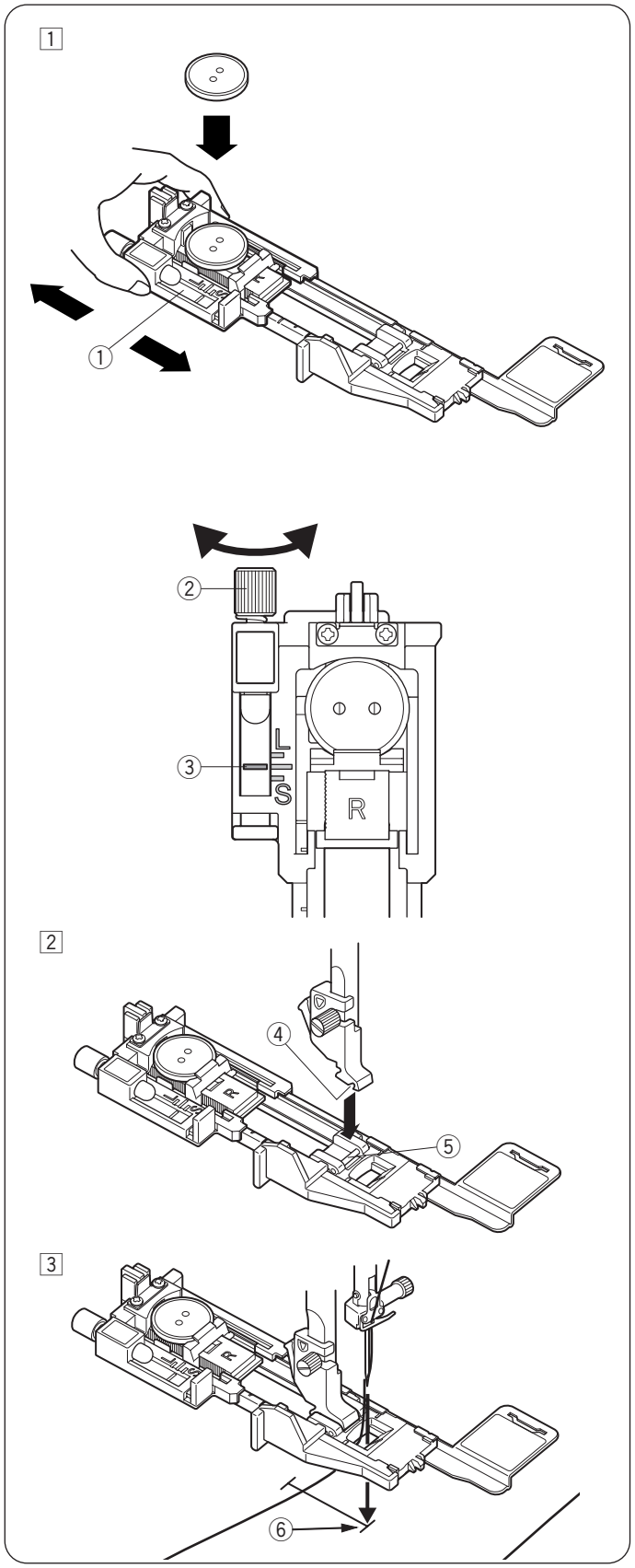

The size of a buttonhole is automatically set by placing a button in the rear of automatic buttonhole foot R.
The button holder of the foot takes a button size of 1 cm (3/8″) to 2.5 cm (1″) in diameter.
When selecting the buttonholes, the LCD screen advise you to lower the buttonhole lever.

NOTE:
It is sometimes necessary to change buttonhole size to match certain heavy or specific fabrics and threads. Make a test buttonhole on an extra piece of the fabric to check your settings.
The preset width of the buttonhole is suited for ordinary buttons.
Apply an interfacing to stretch or fine fabrics.

Sewing

1 Pull the button holder to the back, and place the button in it. Push it together tightly on the button.

① Button holder

NOTE:
Check the length of the test buttonhole, and adjust the buttonhole length if necessary by turning the adjusting screw on the buttonhole foot.
To increase the buttonhole length, turn the adjusting screw to move the marker toward “L”.
To decrease the buttonhole length, turn the adjusting screw to move the marker toward “S”.

② Adjusting screw
③ Marker

2 Press the needle up/down button to raise the needle.

Press the lockout key.

Attach the automatic buttonhole foot R snapping the pin into the groove of the foot holder.

You may lift the presser foot lifter to the extra lifted position when placing the automatic buttonhole foot under the foot holder.

Raise the presser foot.

④ Groove
⑤ Pin

3 Draw the needle thread to the left through the hole of foot.

Press the lockout key to unlock the machine.

Mark the buttonhole position on the fabric and place it under the buttonhole foot. Lower the needle at the starting point by turning the handwheel.

⑥ Starting point

4

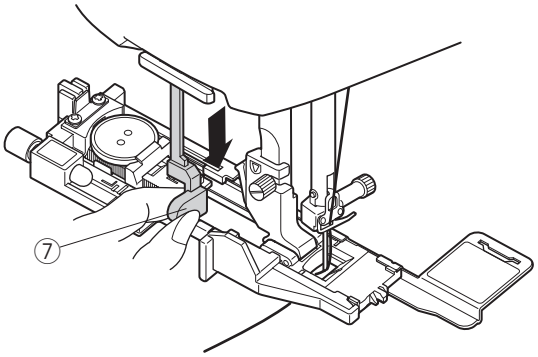

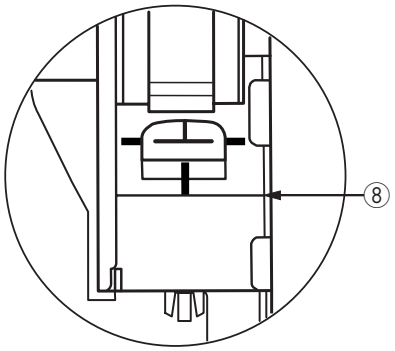

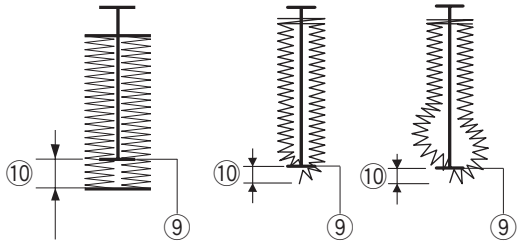

5

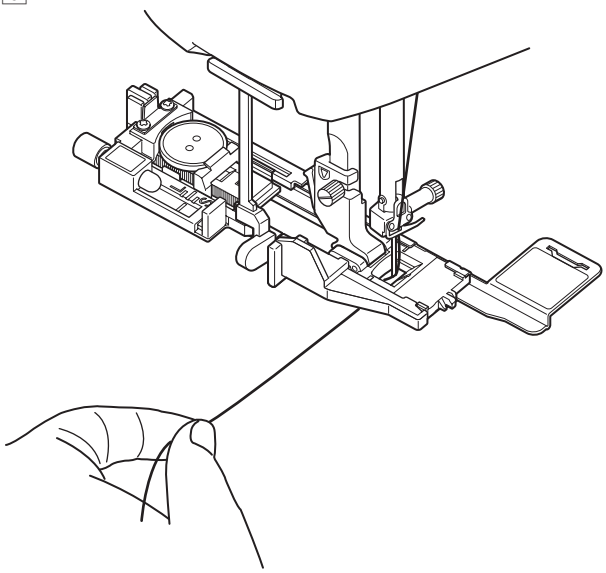

4 Lower the presser foot and pull the buttonhole lever down as far as it will go.

⑦ Buttonhole lever

NOTE:
Make sure there is no gap between the slider and front stopper, otherwise the buttonhole will be out of position or there will be a sewing gap.

⑧ No gap
⑨ Starting point
⑩ Sewing gap

5 Start sewing while pulling the needle thread lightly to the left. After sewing a few stitches, free the thread and continue sewing.

6

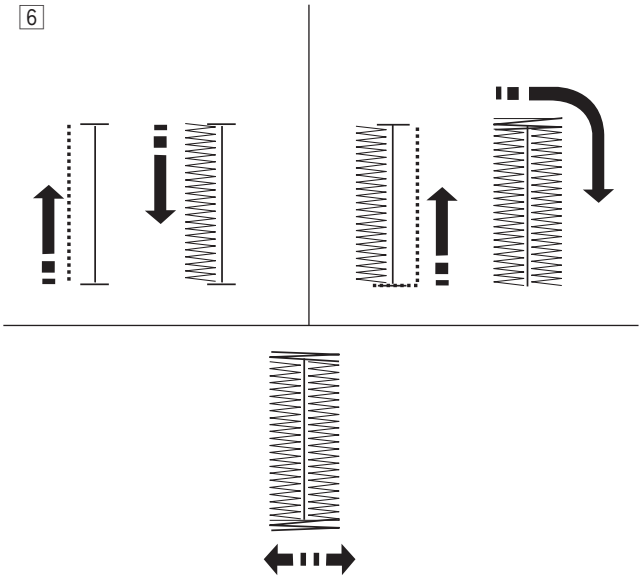

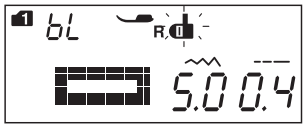

6 The buttonhole is sewn automatically in the sequence shown. When the buttonhole is finished, the machine will stop automatically with the needle in the up position.

Press the thread cutter button and remove the fabric.

NOTE:
If you start sewing without pulling down the buttonhole lever, the LCD screen will show a warning and the machine will stop after a few stitches. Pull the buttonhole lever down and start sewing.

7

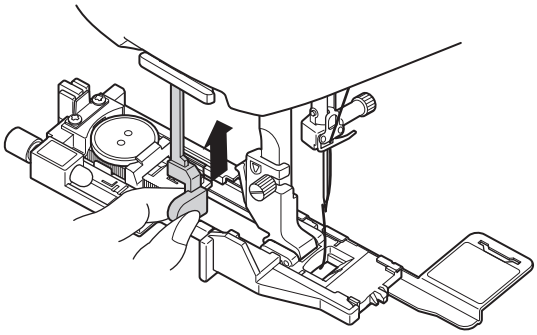

7 After you finish buttonhole sewing, push the buttonhole lever up as far as it will go.

8

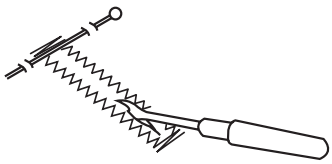

8 Place a pin just below the bartack at each end to prevent accidentally cutting the threads. Cut the opening with the seam ripper. Use an eyelet puncher to open a keyhole buttonhole.

NOTE:
To make a solid and sturdy buttonhole, sew another layer of buttonhole over the previous one.
After the buttonhole is finished, simply press the start/stop button again.
Do not raise the foot or reselect the pattern.
The machine will sew another buttonhole over the previous one.

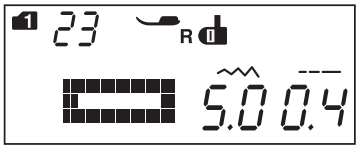

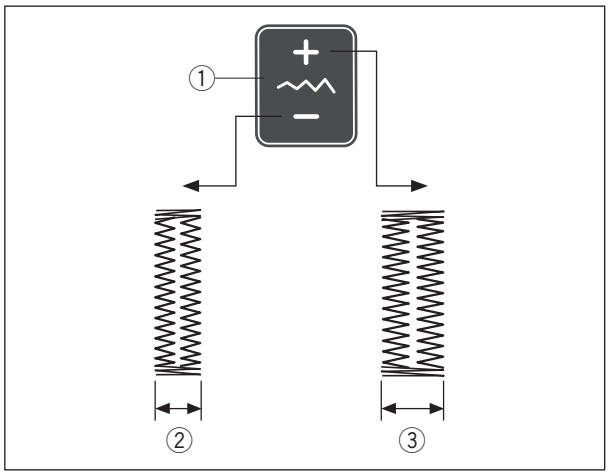

Manual settings

The buttonhole width can be adjusted by pressing the stitch width adjusting key.

Press the " + " sign on the stitch width adjusting key to increase the buttonhole width.

Press the " – " sign on the stitch width adjusting key to decrease the buttonhole width.

① Stitch width adjusting key
② Narrower buttonhole
③ Wider buttonhole

NOTE:
The buttonhole width can be adjusted from 2.6 to 9.0.

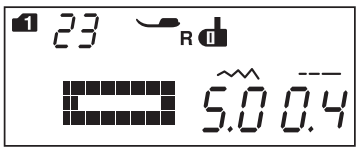

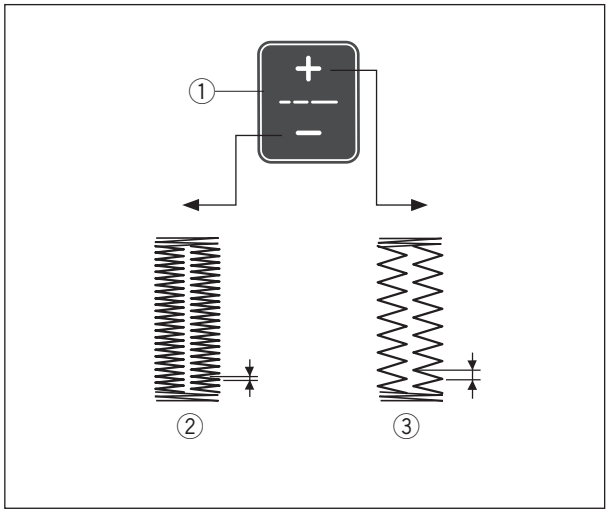

Adjusting the buttonhole stitch density

The buttonhole stitch density can be adjusted by pressing the stitch length adjusting key.

Press the " + " sign on the stitch length adjusting key to make the buttonhole stitch less dense.

Press the " – " sign on the stitch length adjusting key to make the buttonhole stitch denser.

① Stitch length adjusting key
② Denser buttonhole
③ Less dense buttonhole

NOTE:
The stitch density can be adjusted from 0.2 to 1.0.

Using the Stabilizer Plate

The stabilizer plate holds and supports the fabric so it is helpful when sewing buttonholes over the hem of thick fabrics.

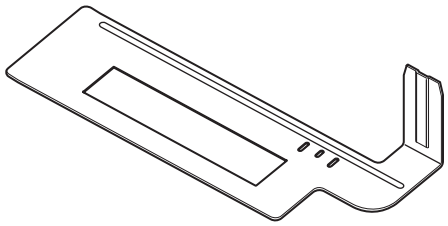

1 Insert the tab of the stabilizer plate ① into the slot ② of the buttonhole foot.

① Stabilizer plate
② Slot

1

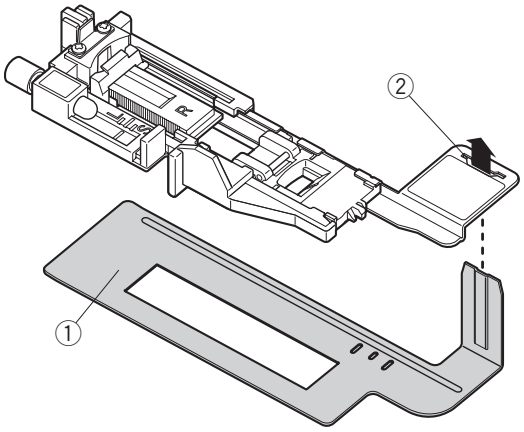

2

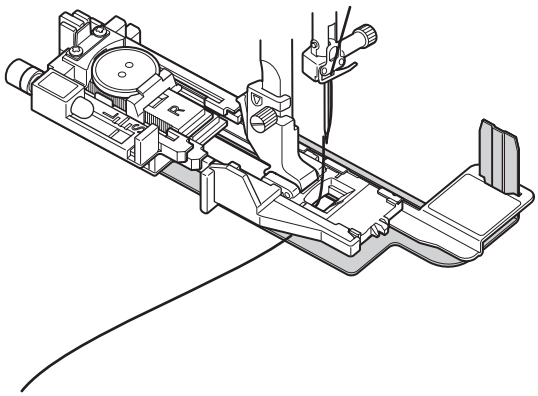

2 Place the button on the button holder of the foot.

Attach the buttonhole foot to the machine.

Draw the needle thread to the left between the foot and stabilizer plate.

3

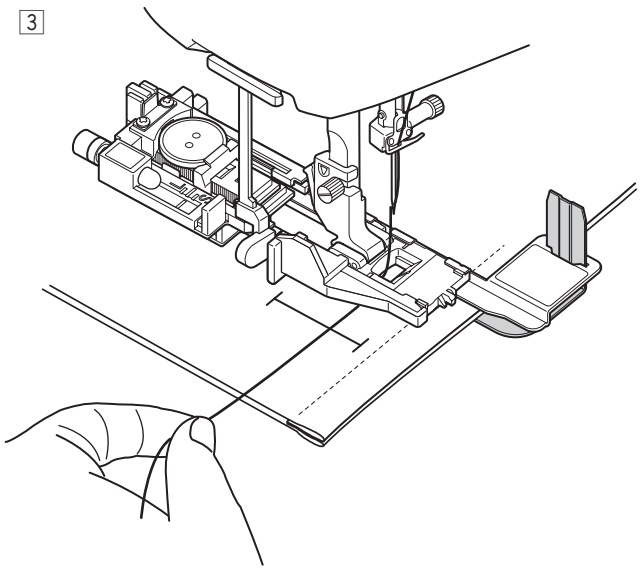

3 Place the fabric between the buttonhole foot and stabilizer plate. Lower the needle into the starting point by turning the handwheel.

Lower the foot and buttonhole lever.

Start the machine while pulling the needle thread lightly to the left. After sewing a few stitches, free the thread and continue sewing.

NOTE:
The sewing procedure is exactly the same as that for square buttonholes.

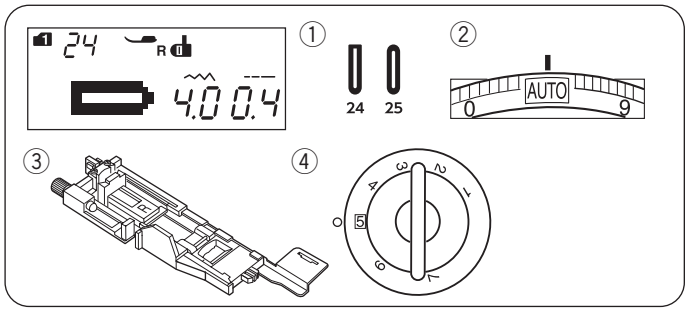

Round End and Fine Fabric Buttonholes

Machine settings

①	Pattern:	MODE 1: 24, 25
②	Thread tension:	AUTO
③	Presser foot:	Automatic buttonhole foot R
④	Foot pressure:	5

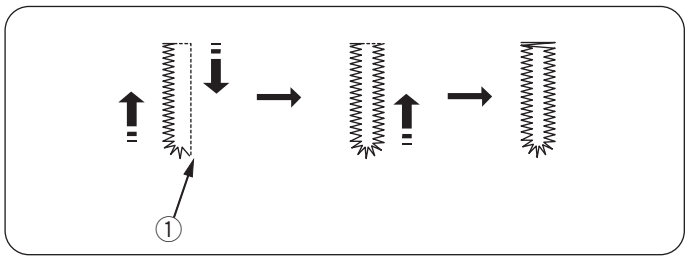

The sewing procedure is the same as the square buttonhole (refer to pages 46-48).
The machine will sew a buttonhole in the order shown.

① Starting point

NOTE:
The buttonhole width can be adjusted from 2.6 to 9.0.
The stitch density can be adjusted from 0.2 to 1.0.

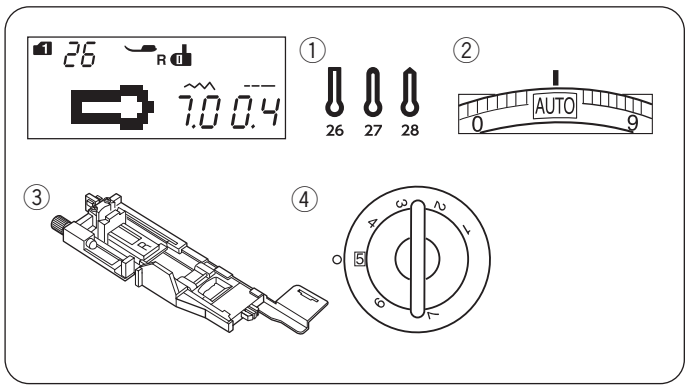

Keyhole Buttonholes

Machine settings

①	Pattern:	MODE 1: 26-28
②	Thread tension:	AUTO
③	Presser foot:	Automatic buttonhole foot R
④	Foot pressure:	5

NOTE:
The buttonhole 27 is used for thick buttons on medium weight fabrics.
The buttonhole 28 is used with thick buttons and heavy fabrics.

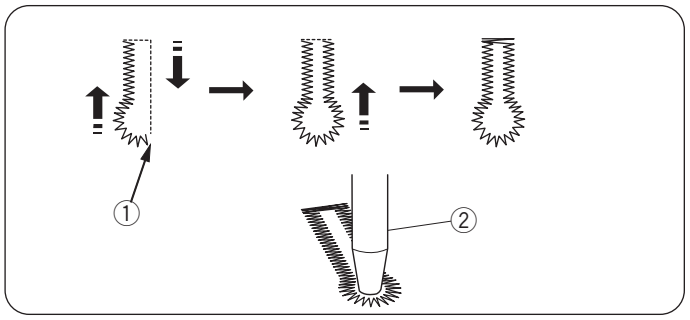

The sewing procedure is the same as the square buttonhole (refer to pages 46-48).
The machine will sew a buttonhole in the order shown.
Use an eyelet puncher to open a keyhole buttonhole.

① Starting point
② Eyelet puncher

NOTE:
The buttonhole width can be adjusted from 5.6 to 9.0.
The stitch density can be adjusted from 0.2 to 1.0.

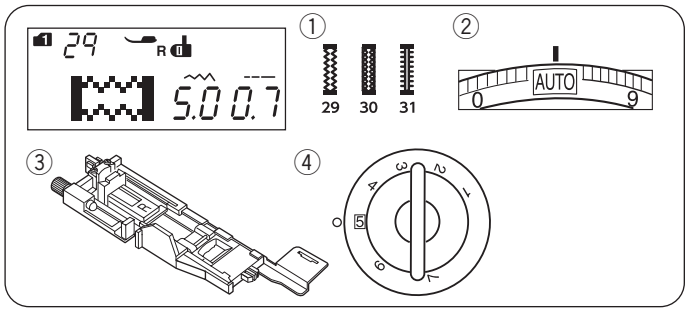

Stretch Buttonholes

Machine settings

①	Pattern:	MODE 1: 29-31
②	Thread tension:	AUTO
③	Presser foot:	Automatic buttonhole foot R
④	Foot pressure:	5

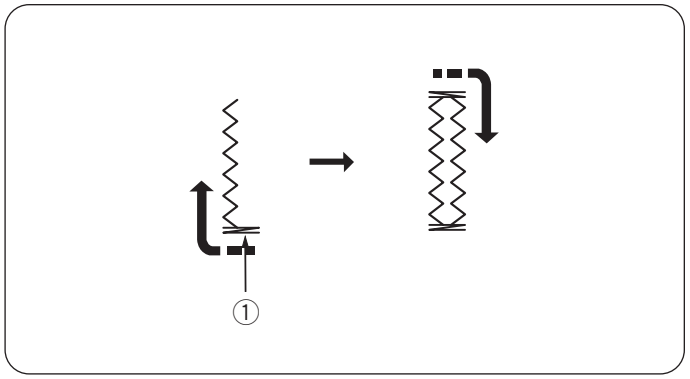

The sewing procedure is the same as the square buttonhole (refer to pages 46-48).
The machine will sew a buttonhole in the order shown.

① Starting point

NOTE:
The buttonhole width can be adjusted from 2.6 to 9.0.
The stitch density can be adjusted from 0.5 to 1.0 for pattern 29 (mode 1), 0.7 to 1.2 for pattern 30 (mode 1) and 0.5 to 2.5 for pattern 31 (mode 1). If the stitch balance of the left and right row is not even, correct it by turning the feed balancing dial (refer to page 83).

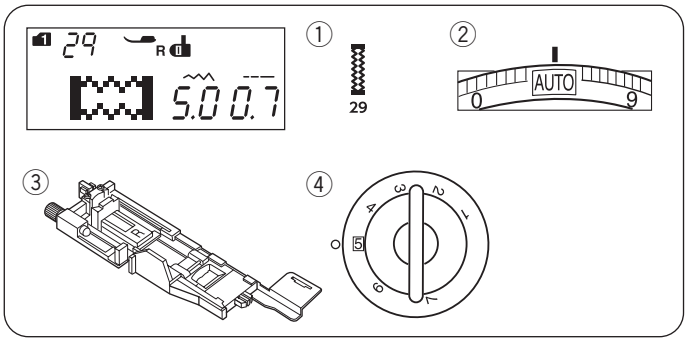

Corded Buttonhole

Machine settings

①	Pattern:	MODE 1: 29
②	Thread tension:	AUTO
③	Presser foot:	Automatic buttonhole foot R
④	Foot pressure:	5

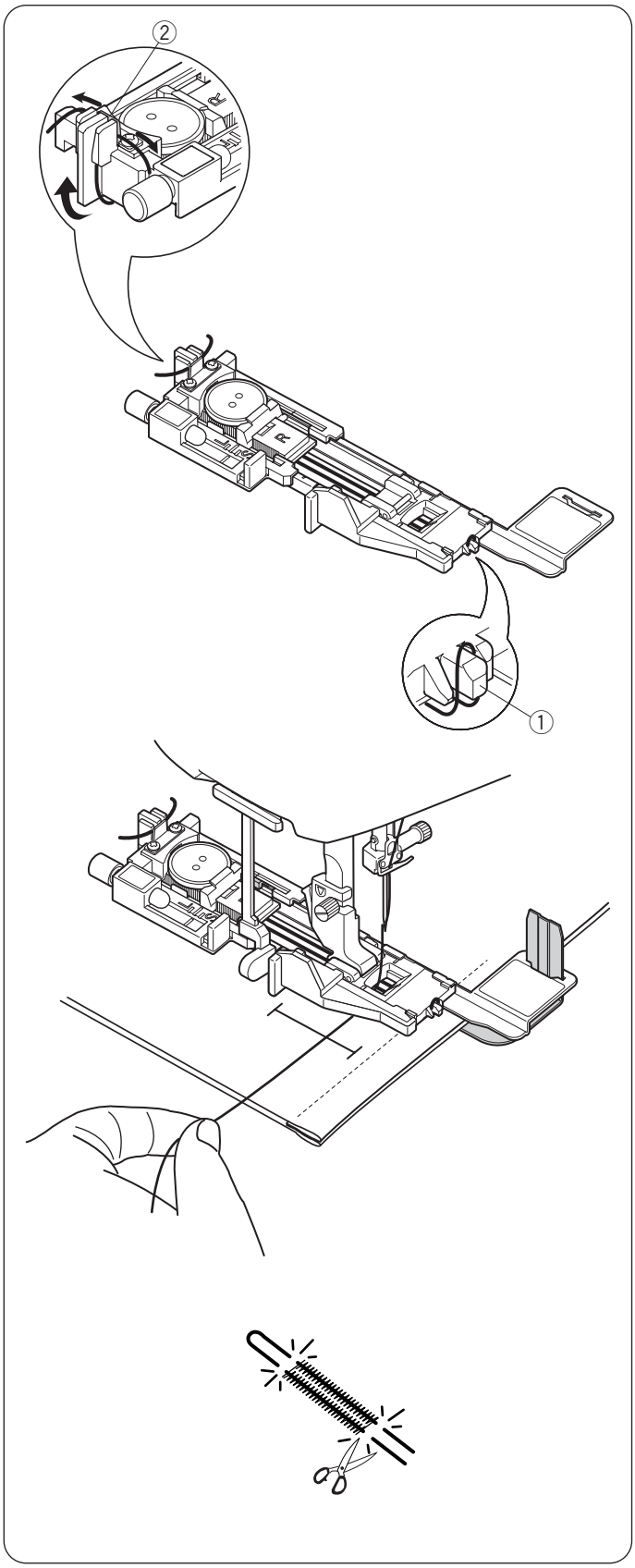

Place the button on the button holder on the buttonhole foot.
Hook a filler cord on the spur on the front of the foot.
Bring the ends of cord toward the back and under the foot.
Bring up the ends of the cord and insert both ends between the ribs and metal plate.

① Spur
② Metal plate

To sew a corded buttonhole, follow the same procedure as a square buttonhole.

Lower the needle into the fabric where the buttonhole will start.
Lower the foot and buttonhole lever.
Pull the needle thread lightly to the left.
Start the machine to sew the buttonhole over the cord.
The machine stops automatically when finished.
Remove the fabric from the machine.

Cut the filler cord at both ends.

To cut the buttonhole opening, refer to page 48.

NOTE:
Set the stitch width in accordance with the thickness of filler cord used.

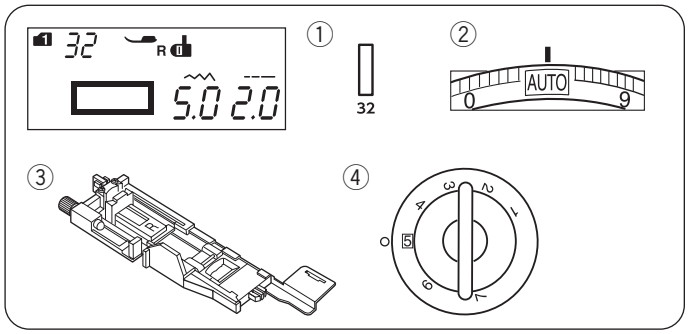

Welted Buttonhole

Machine settings

① Pattern: MODE 1: 32
② Thread tension: AUTO
③ Presser foot: Automatic buttonhole foot R
④ Foot pressure: 5

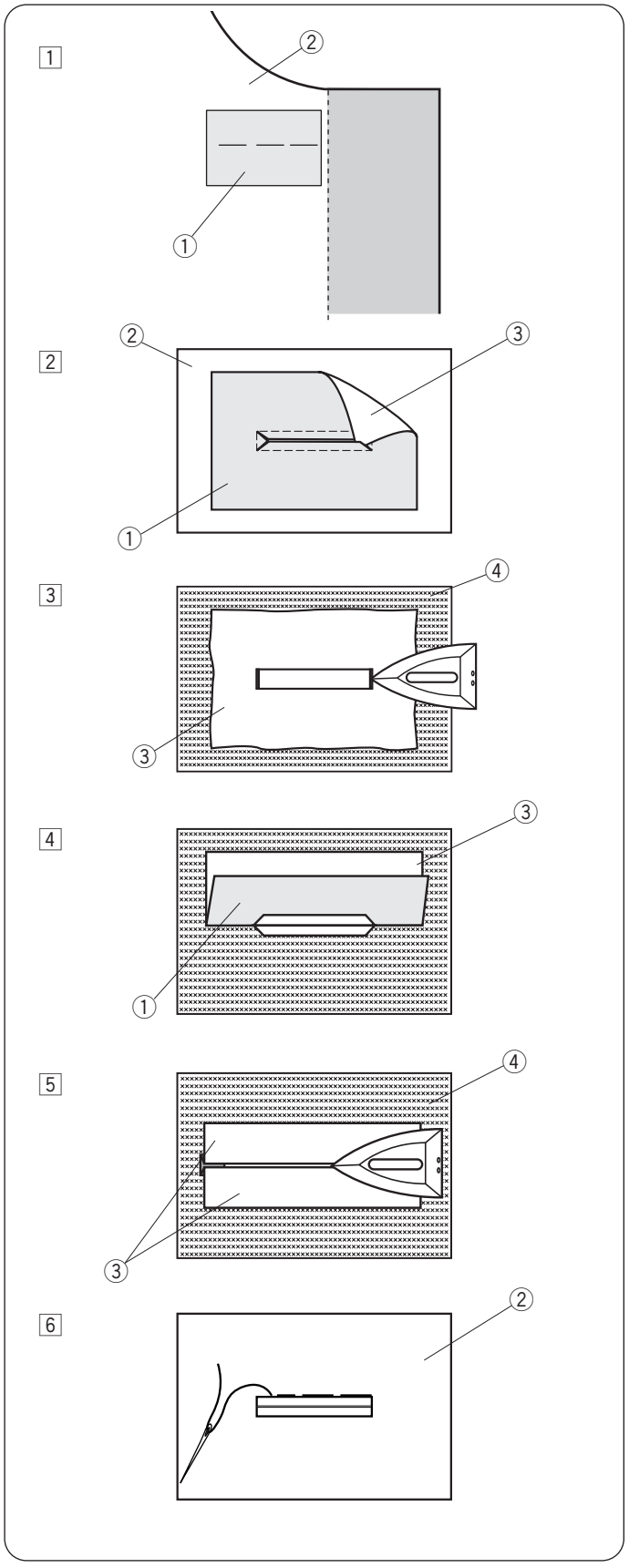

A welted buttonhole is made by stitching a strip or patch of fabric to the buttonhole.

Welted buttonholes are particularly suitable for tailored garments, but are not recommended for sheer or delicate fabrics where the patch might show through or add bulk.

1 Baste a patch to the garment fabric with the right sides together.
① Wrong side of patch
② Right side of garment fabric

2 Select pattern 32 (mode 1).
Sew the welted buttonhole on both fabrics together.
Cut the buttonhole opening as illustrated then pull the patch out through the slit to the other side.
① Wrong side of patch
② Right side of garment fabric
③ Right side of patch

3 Pull out the patch until the right side of the patch is showing. Use an iron to press both corner ends until they are squared off.
③ Right side of patch
④ Wrong side of garment fabric

4 Fold back each side of the patch to form buttonhole lips.
① Wrong side of patch
③ Right side of patch

5 Press both folds with an iron.
③ Right side of patch
④ Wrong side of garment fabric

6 Baste both edges of the seam with a needle and thread by hand.
② Right side of garment fabric

7

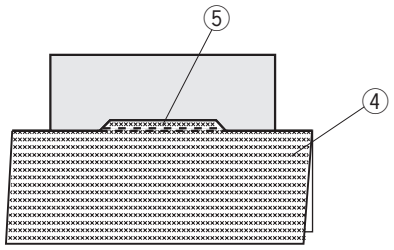

7 Fold over the length of the garment fabric, sew back and forth beside the original seam to secure flaps of the patch.

④ Wrong side of garment fabric
⑤ Sew back and forth

8

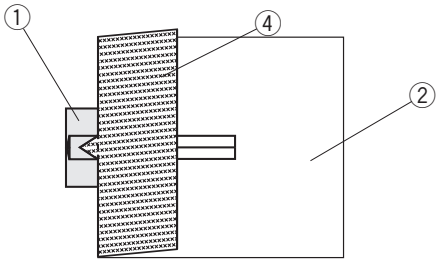

8 Fold over the end of fabric and sew back and forth three times over the triangular end.

① Wrong side of patch
② Right side of garment fabric
④ Wrong side of garment fabric

9

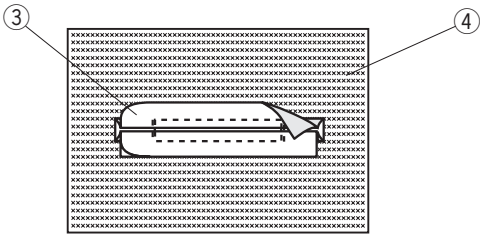

9 The patch should be cut 1 cm to 1.5 cm (7/16″-5/8″) away from the hole. The corners should be cut rounded off as shown.

③ Right side of patch
④ Wrong side of garment fabric

10

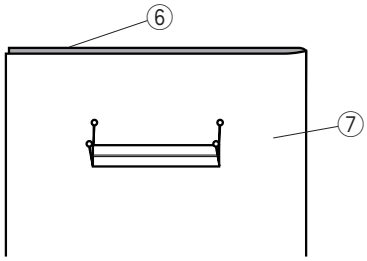

10 Place the facing on the wrong side of the garment fabric. Mark the 4 corners with pins as shown.

⑥ Facing
⑦ Garment fabric

11

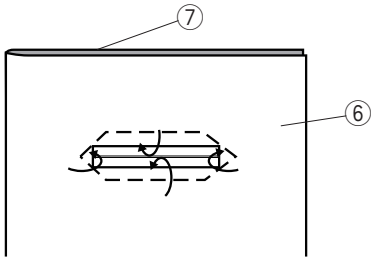

11 Turn all the layers over and cut the buttonhole opening on the facing in the same way as step 2.

Four marker pins show you the corner points on the facing. Fold back each flap between the facing and patch.

⑥ Facing
⑦ Garment fabric

12

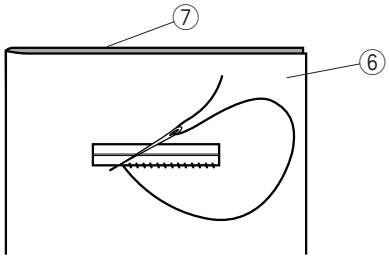

12 Stitch around the opening with a needle and thread as shown.

⑥ Facing
⑦ Garment fabric

13

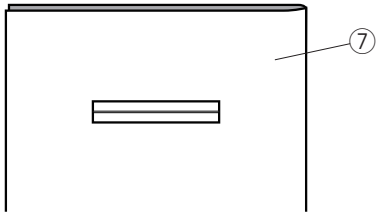

13 The welted buttonhole is complete.

⑦ Garment fabric

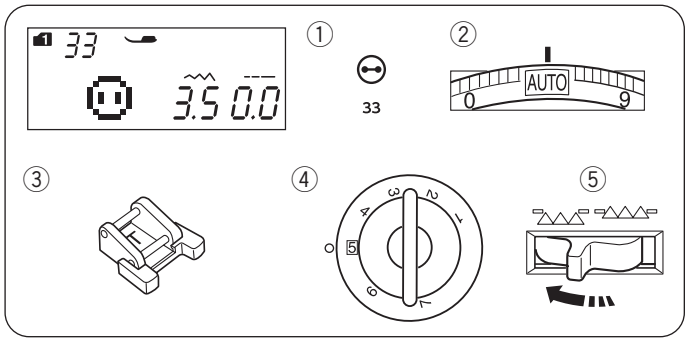

Button Sewing

Machine settings

①	Pattern:	MODE 1: 33
②	Thread tension:	AUTO
③	Presser foot:	Button sewing foot T
④	Foot pressure:	5
⑤	Feed dogs:	Lowered

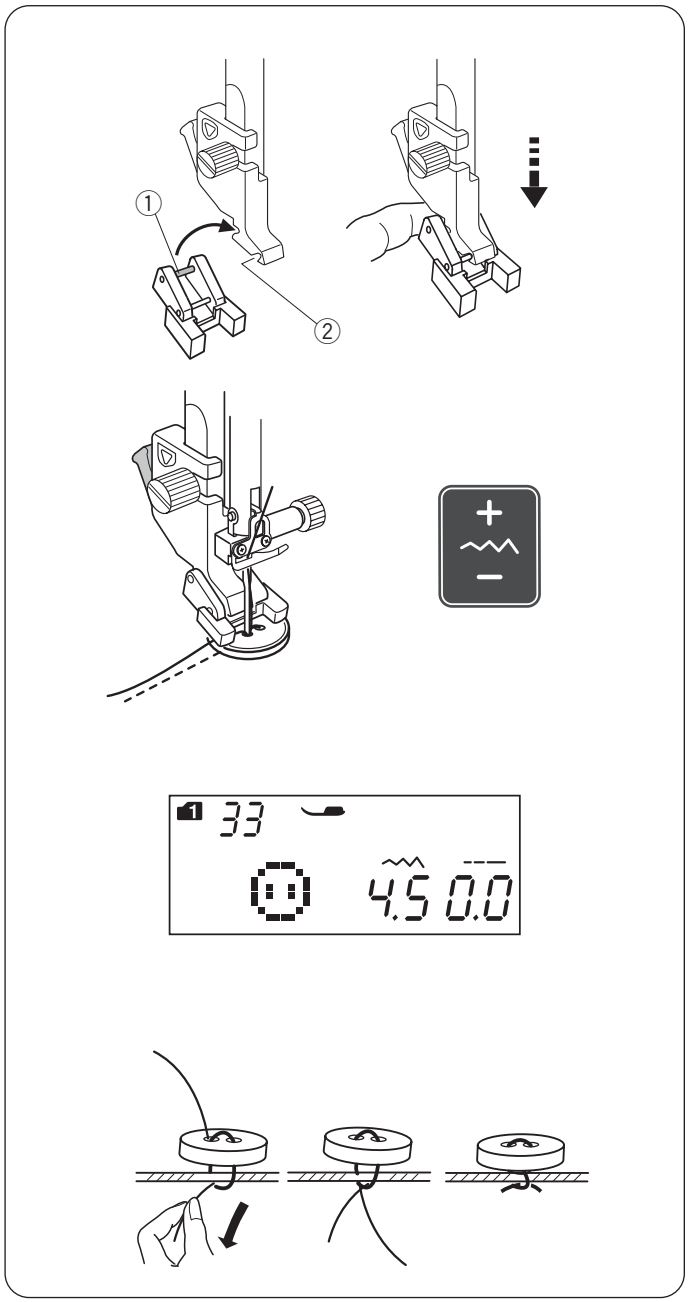

Attaching the button sewing foot T

Make sure to press the lockout key to lock the machine.

Insert the rear pin on the foot into the rear groove of the foot holder.

① Rear pin
② Rear groove

Gently lower the presser bar while holding the foot with your fingers.

Press the lockout key to unlock the machine.

Sewing

Lower the feed dogs.
Place a button on the fabric and lower the needle into the left hole of the button by turning the handwheel with your hand.
Lower the foot to hold the button in place, aligning the direction of the button.

Raise the needle by turning the handwheel until the needle bar swings to the right.
Press the stitch width adjusting key so the needle enters into the right hole of the button.

Start sewing and continue until the machine stops automatically.

Remove the fabric from the machine.

Pull the bobbin threads to bring the needle threads down to the wrong side of the fabric.
Tie the threads together.

NOTE:
Do not use the thread cutter button to cut the threads. Otherwise, you cannot tie the threads.

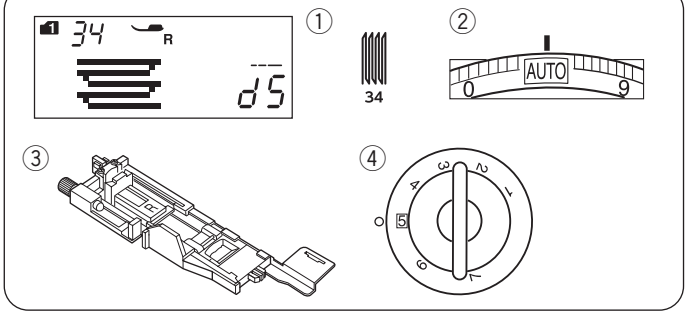

Darning

Machine settings

①	Pattern:	MODE 1: 34
②	Thread tension:	AUTO
③	Presser foot:	Automatic buttonhole foot R
④	Foot pressure:	5

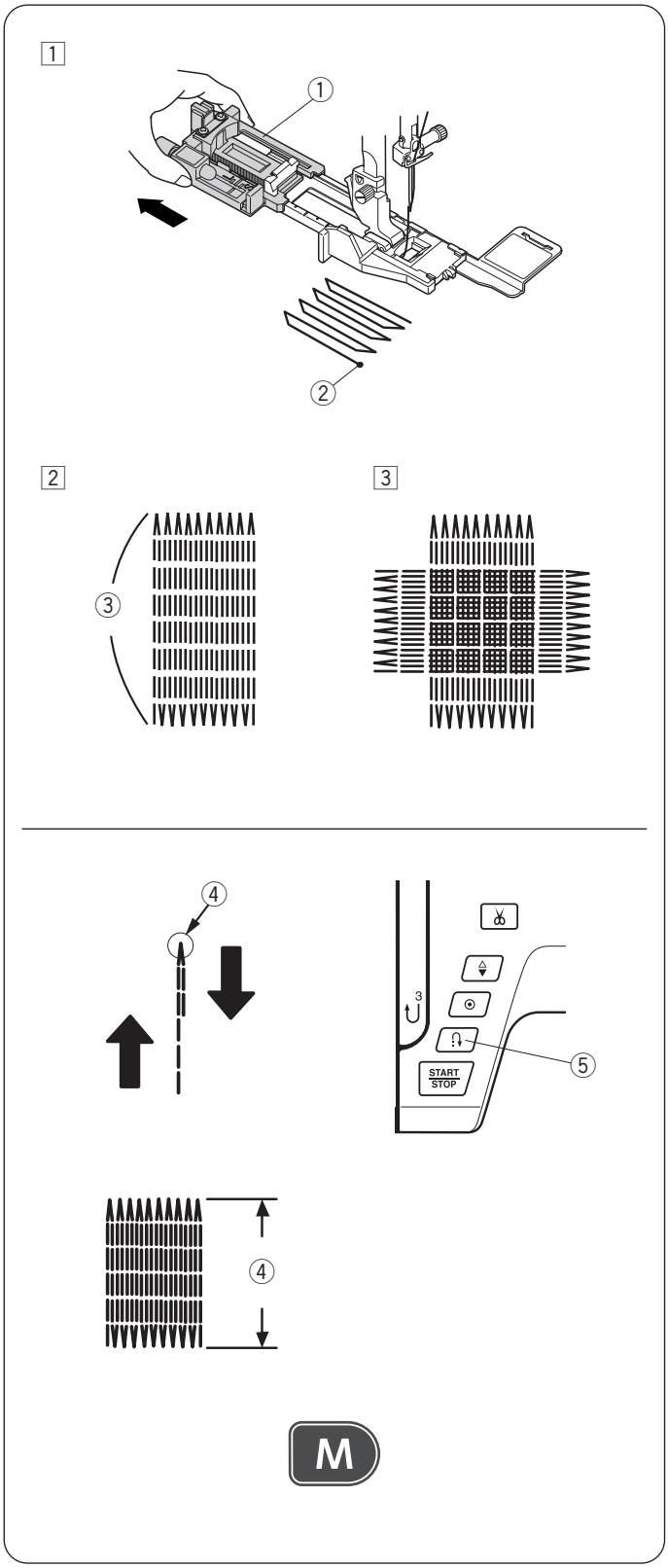

1 Attach the automatic buttonhole foot R and pull the button holder all the way out.

Place the fabric under the foot, and lower the needle at the starting point. Then lower the foot.

① Button holder
② Starting point

2 Start the machine and continue sewing until the machine stops automatically.

NOTE:
The machine will sew the darning at maximum 2 cm (3/4″) length and fixed 0.9 cm (3/8″) width when sewing until it stops automatically.

③ 2 cm (3/4″)

3 Sew another layer of darning over the first layer, at a right angle to it.

To sew a shorter darning

Sew the first line to the desired length and stop the machine.
Press the reverse button and start the machine again. The machine will sew the rest of the darning and stop automatically.

④ Required length
⑤ Reverse button

To sew the same size darning

Simply start the machine to sew another darning in the same size.
To sew the next darning in a different size, press the memory key.

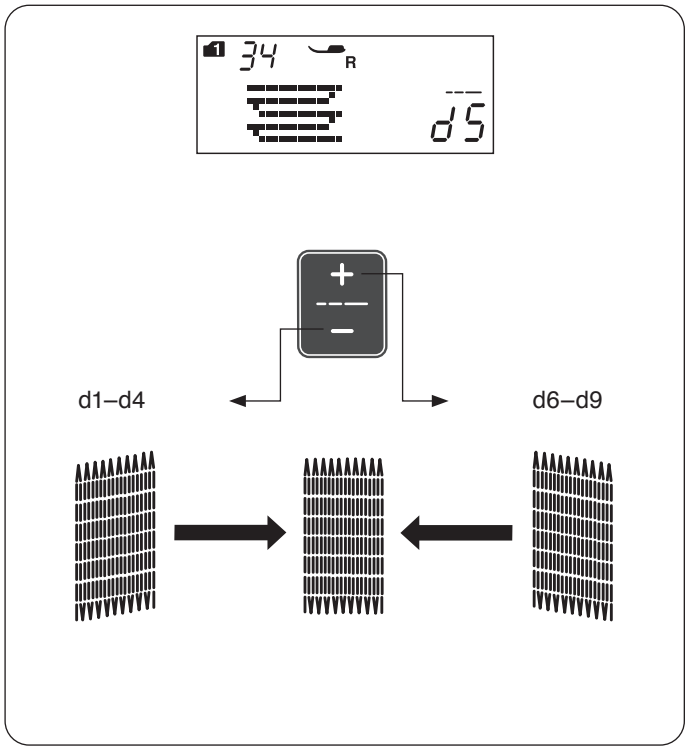

To adjust the evenness of darning stitches

You can correct unevenness of darning stitches by pressing the " + " or " – " key of the stitch length adjusting key.

If the left corner is lower than the right side, press the " – " key to correct it, and vice versa.

NOTE:
The evenness can be adjusted within d1 to d9 (default setting is d5).

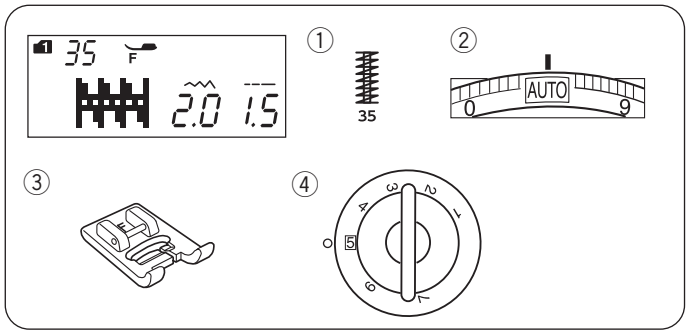

Tacking

Machine settings

①	Pattern:	MODE 1: 35
②	Thread tension:	AUTO
③	Presser foot:	Satin stitch foot F
④	Foot pressure:	5

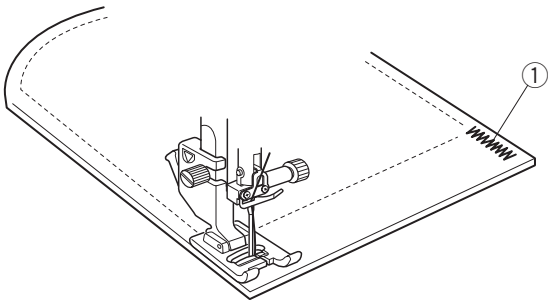

Tacking is used to reinforce pockets, crotch seams and belt carriers where extra strength is needed.

Sewing

Lower the needle at the starting point.
Lower the foot and sew until the machine stops automatically.
The machine will sew a tacking 1.5 cm (5/8″) long automatically.

① Tacking
② Starting point
③ 1.5 cm (5/8″)

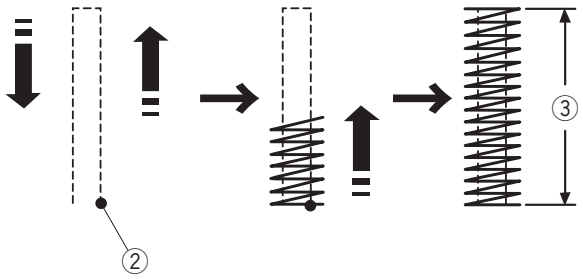

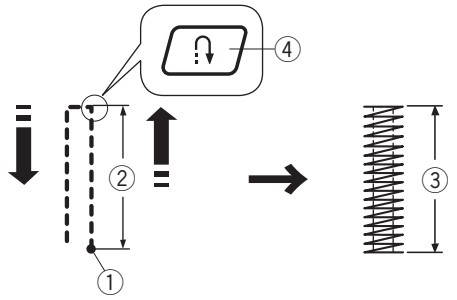

Sewing a shorter tack

To sew a tack shorter than 1.5 cm (5/8″), first stop the machine after sewing the required length, and then press the reverse button.
The required length has been determined.

Start the machine and continue sewing until the machine stops automatically.

① Starting point
② Required length
③ Tack length
④ Reverse button

Sewing the same size tack

To sew another tack at the same size, simply start the machine and it will stop automatically when finishing sewing.

Sewing the tack at a different size

To sew the next tack at a different size, press the memory key to memorize a new size and start sewing from the beginning.

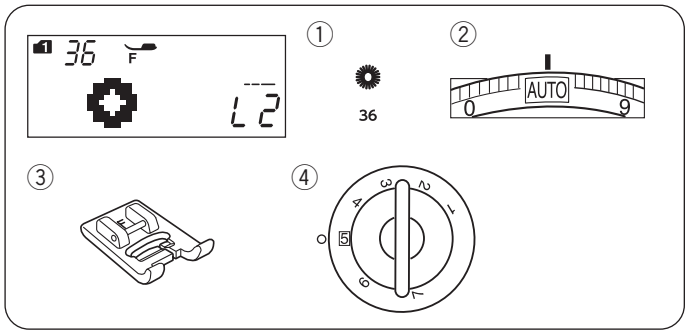

Eyelet

Machine settings

①	Pattern:	MODE 1: 36
②	Thread tension:	AUTO
③	Presser foot:	Satin stitch foot F
④	Foot pressure:	5

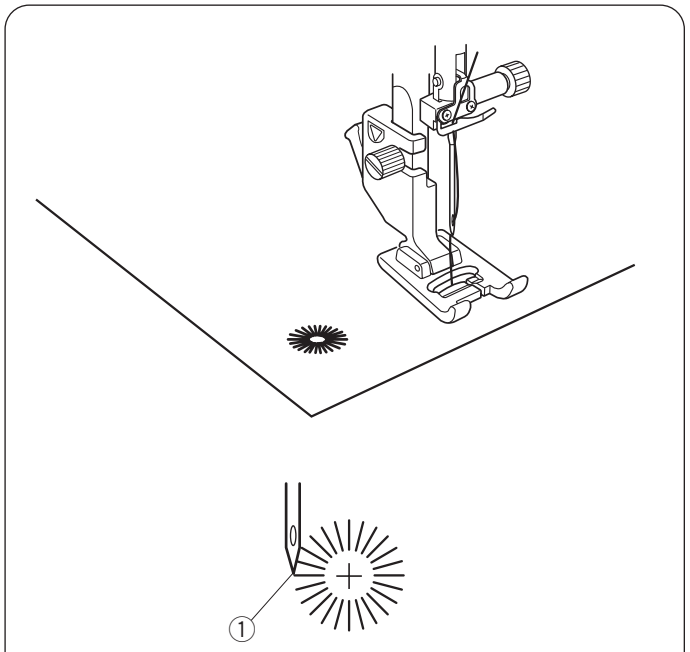

The eyelet is used for belt holes, etc.

Sewing

Sew until the machine stops automatically.

Open the eyelet with an eyelet puncher or pointed scissors.

① Starting point

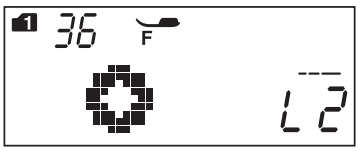

Adjusting the shape of an eyelet

Correct the shape of the eyelet as follows:
If the eyelet gap opens, press " – " on the stitch length adjusting key.
If the eyelet overlaps, press " + " on the stitch length adjusting key.

① Eyelet gap opens
② Eyelet overlaps

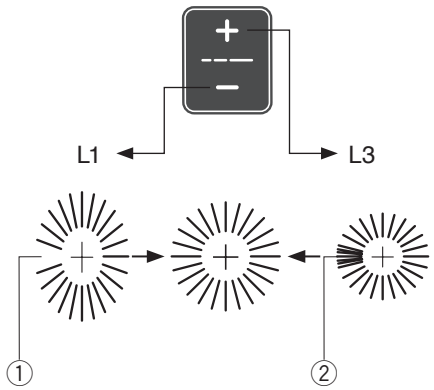

NOTE:
The shape can be adjusted within L1 to L3 (default setting is L2).

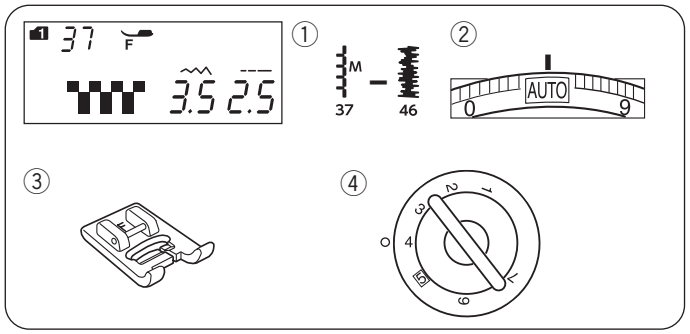

DECORATIVE STITCHING

Applique

Machine settings

① Pattern: MODE 1: 37-46
② Thread tension: AUTO
③ Presser foot: Satin stitch foot F
④ Foot pressure: 4

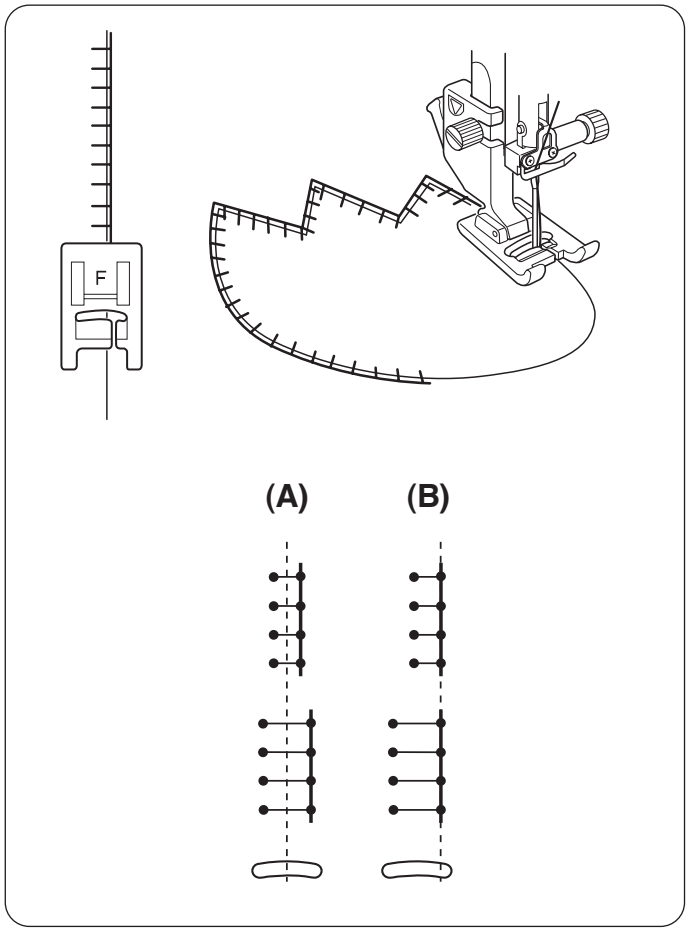

Place an applique on the fabric and baste it in place or use a fusible web to secure the applique in place. Guide the applique fabric, so that the needle falls off the edge of the applique when the needle swings to the right.

(A): The patterns number 37, 38 and 42 (mode 1) have a fixed center needle drop position.
The stitch width changes symmetrically.

(B): The patterns number 39, 40, 41, 43 and 44 (mode 1) have a fixed right needle drop position. When you change the stitch width, the left needle drop position will change.

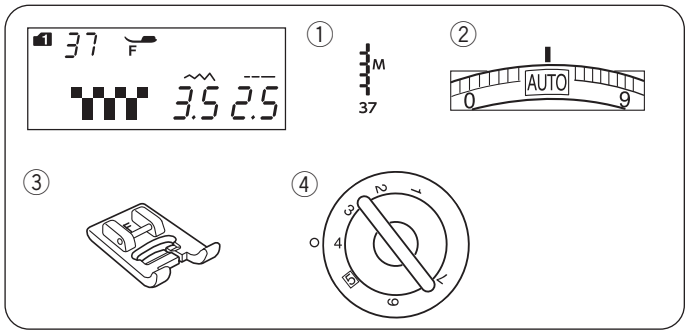

Fringing

Machine settings

① Pattern: MODE 1: 37
② Thread tension: AUTO
③ Presser foot: Satin stitch foot F
④ Foot pressure: 4

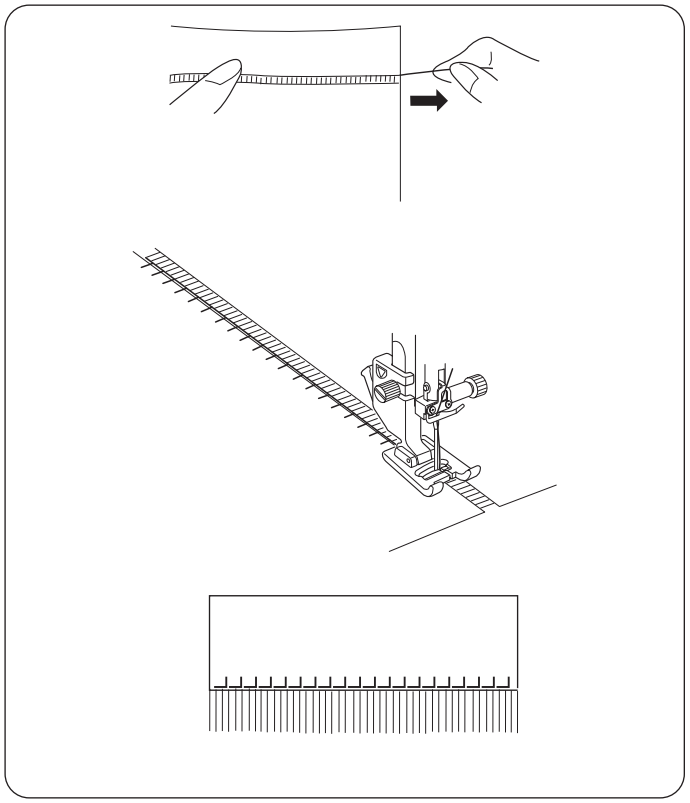

Fringing adds a special touch on table linens and shawls. Choose a firm, woven fabric like linen where threads can be removed easily.

Carefully cut the fabric on the grain. Remove a single strand of yarn or thread where the fringing is to begin.

Sew down the left side so the right hand stitches fall in the open space.

Remove all excess yarn located to the right of the stitching and create a fringe.

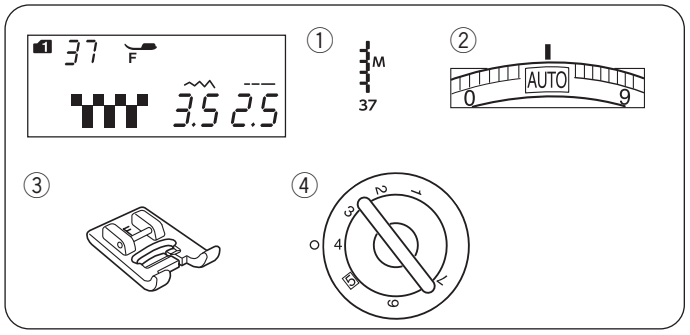

Drawn Work

Machine settings

① Pattern: MODE 1: 37
② Thread tension: AUTO
③ Presser foot: Satin stitch foot F
④ Foot pressure: 4

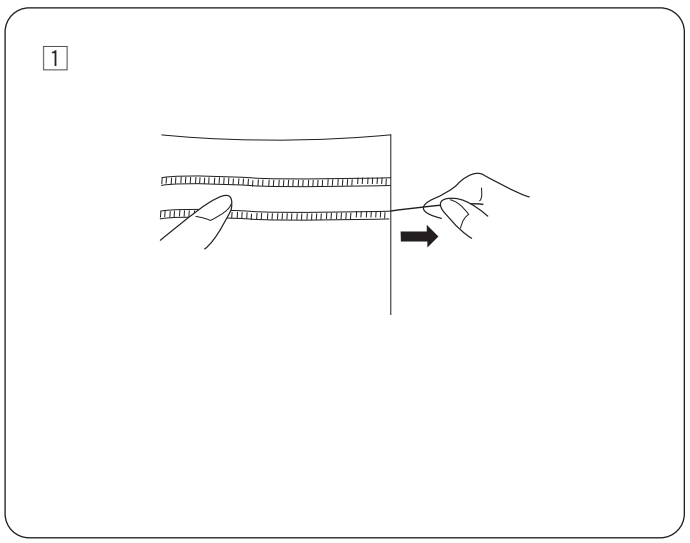

Drawn work uses the same method as fringing. Choose a firm, woven fabric like linen where threads can be removed easily.

1 Carefully cut the fabric on the grain. Determine the width of the drawn work and remove one strand of yarn or fabric thread at each end.

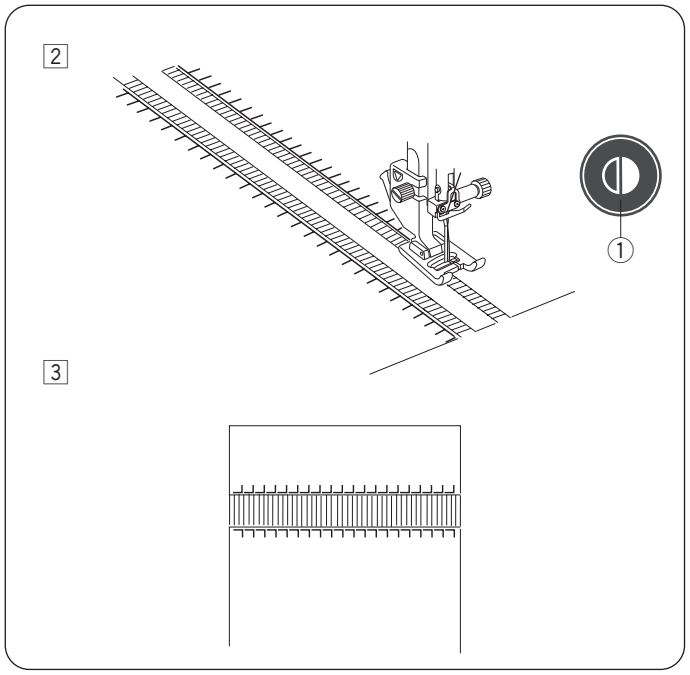

2 Sew down the left side, guiding the fabric so the right hand stitches fall in open space. After finishing the left side, press the mirror image key. Sew down the other side (refer to page 73 for mirror image sewing).

① Mirror image key

3 Remove the yarn or fabric threads between the stitching.

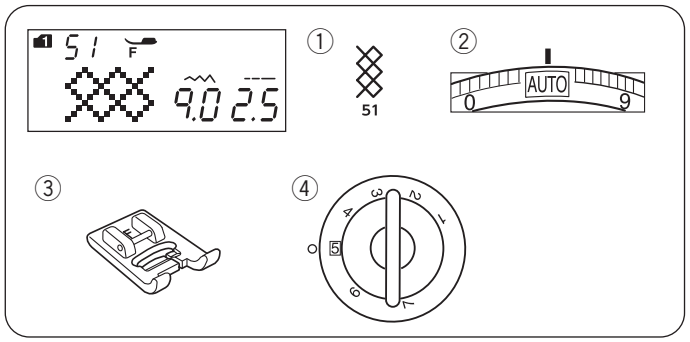

Smocking

Machine settings

① Pattern: MODE 1: 51
② Thread tension: AUTO
③ Presser foot: Satin stitch foot F
④ Foot pressure: 5

* Stitch patterns 47 48 49 52 53 54 55 58 59 (mode 1) can also be used.

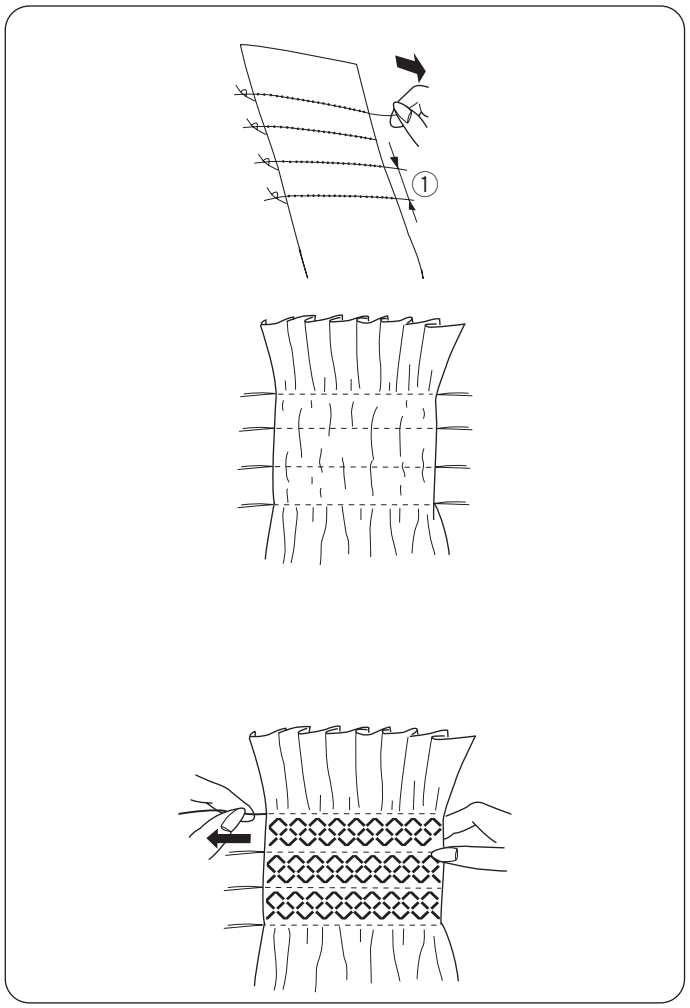

Choose a soft, lightweight fabric such as batiste, gingham or challis. Cut the fabric three times wider than the projected width.

NOTE:
The purple tip needle is recommended to prevent skipped stitches.

Sew rows of straight stitches, 1.5 cm (5/8″) apart with the stitch length “5.0” and thread tension dial at “1” to across the area to be smocked.

① 1.5 cm (5/8″)

Tie the threads along one edge. From the other edge, pull the bobbin threads to distribute the gathers evenly.

NOTE:
Pull up the bobbin thread and draw a 10 cm (4″) thread tail to the back before starting to sew.
Use the thread cutter on the face cover.

Select a smocking stitch and return the thread tension dial to “AUTO”.
Sew the smocking stitches between the gathered rows.
Remove the straight stitches between the gathered rows.

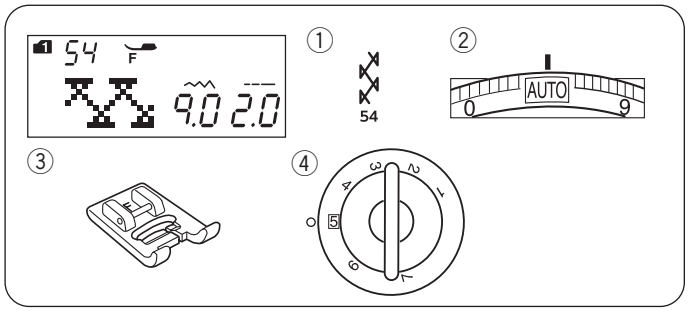

Fagoting

Machine settings

① Pattern: MODE 1: 54
② Thread tension: AUTO
③ Presser foot: Satin stitch foot F
④ Foot pressure: 5

* Stitch patterns 17 55 57 (mode 1) 08 09 (mode 2) can also be used.

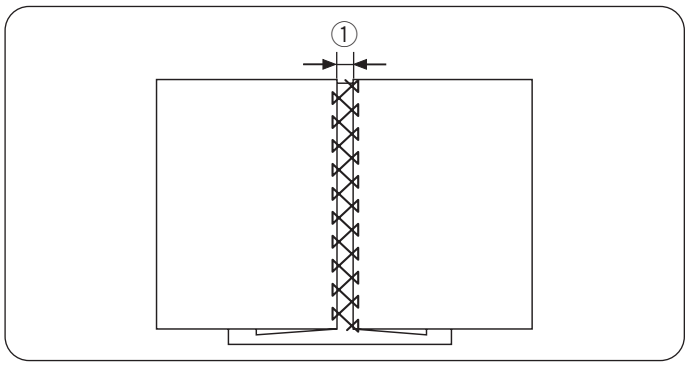

Use this stitch to join two pieces of fabric to create an open work appearance and add design interest.

Fold under each fabric edge 1.5 cm (5/8″) and press.

Pin the two edges to paper or tear away backing 0.5 cm (3/16″) apart.

① 0.5 cm (3/16″)

Sew slowly, guiding the fabric so the needle catches the folded edge on each side.

After finishing sewing, tear away the paper.

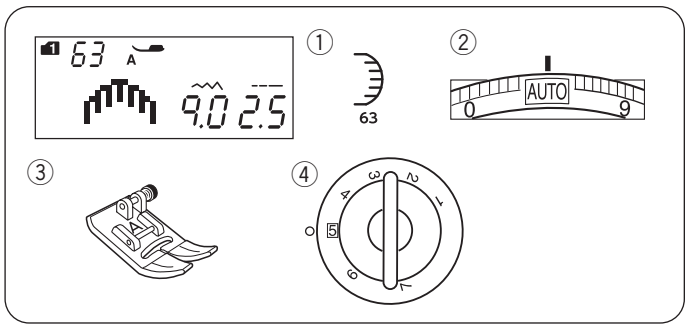

Scallop

Machine settings

① Pattern: MODE 1: 63
② Thread tension: AUTO
③ Presser foot: Zigzag foot A
④ Foot pressure: 5

* Stitch pattern 73 78 (mode 1) can also be used.

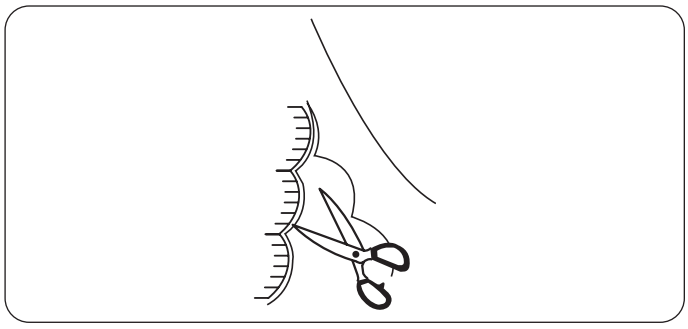

Sew scallops 1 cm (3/8″) from the fabric edge.

Trim the allowance close to the stitches.

Make sure not to cut the stitches.

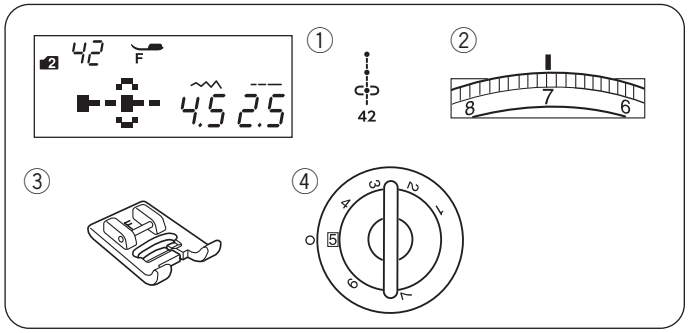

French Knots

Machine settings

① Pattern: MODE 2: 42
② Thread tension: 5-8
③ Presser foot: Satin stitch foot F
④ Foot pressure: 5

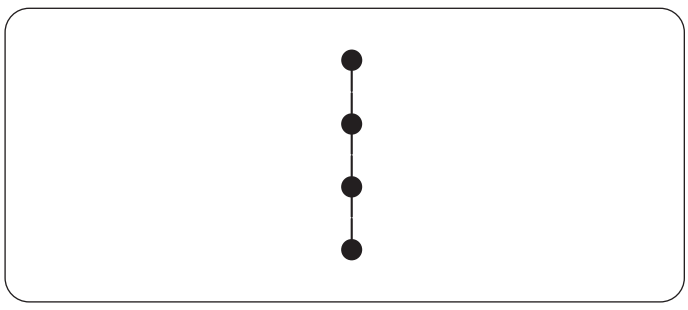

Tighten the thread tension to 5-8 when sewing.

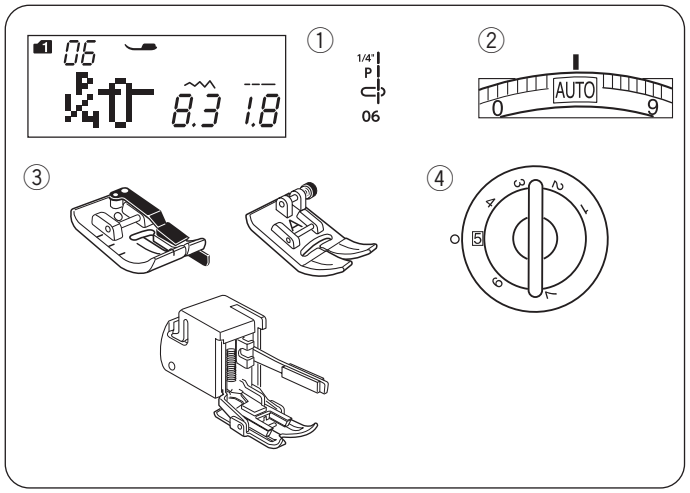

Patchwork Piecing

Machine settings

① Pattern: MODE 1: 05, 06, 07, 05S-07S
② Thread tension: AUTO
③ Presser foot: 1/4″ seam foot O or
Zigzag foot A or
Even feed foot
④ Foot pressure: 5

NOTE:
- When sewing with the even feed foot, be sure to sew at a slow speed.
- Use 1/4″ seam foot O for the stitch pattern 06, 07, 06S and 07S (mode 1). Use zigzag foot or even feed foot for stitch pattern 05 and 05S.

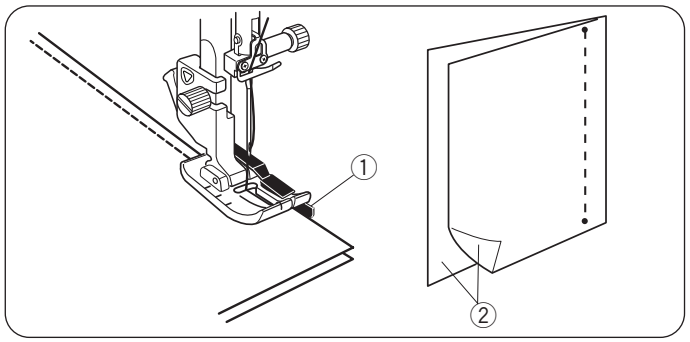

Patchwork piecing

Select pattern 06 (mode 1).
Place the patchwork pieces right sides together. Sew while guiding the edge of the fabric along the guide on the foot to keep a precise 1/4″ seam allowance.

① Guide
② Right sides of the fabric

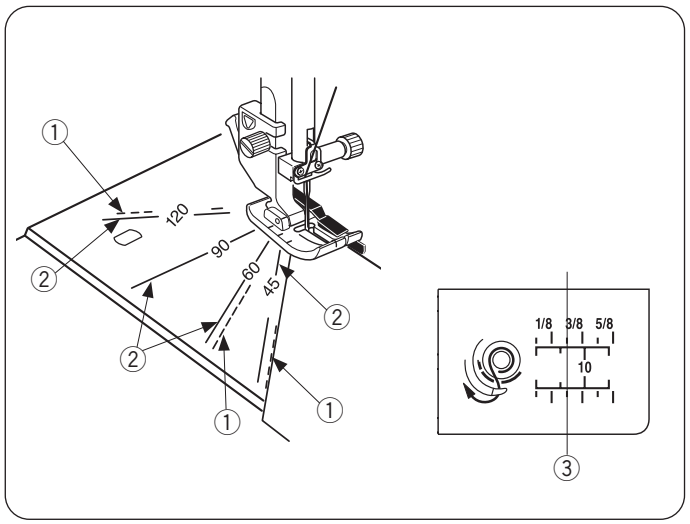

Angle scales on the needle plate

You can easily seam patchwork pieces at the desired angle without marking, by using the angle scales on the needle plate.
The angle scales are marked at 45, 60, 90 and 120 degrees.
Use the broken lines when piecing the patchwork pieces with the 1/4″ seam foot O as illustrated.

① Broken line

NOTE:
Use the solid lines when piecing the patchwork pieces with the zigzag foot A. Align the edge of the fabric to the 1/4″ seam guide line.

② Solid line
③ 1/4″ seam guide line

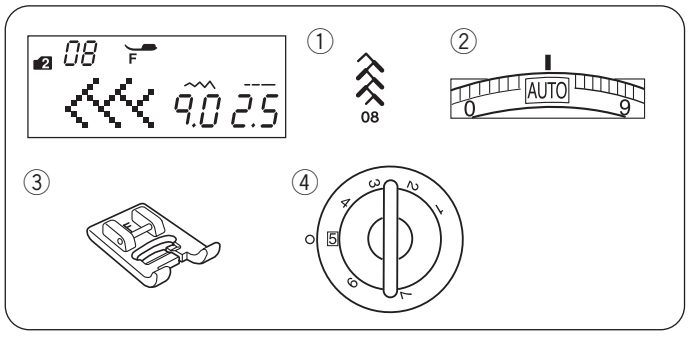

Patchwork

Machine settings

① Pattern: MODE 2: 08
② Thread tension: AUTO
③ Presser foot: Satin stitch foot F
④ Foot pressure: 5

* Stitch patterns 54 55 (mode 1) 09 10 11 12 13 (mode 2) can also be used.

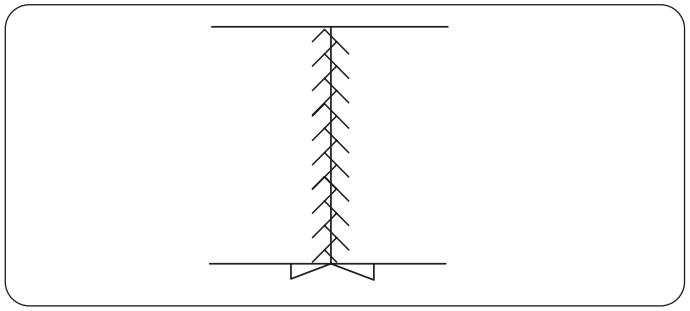

Open the seam flat with the right side up and sew patchwork stitch along the seam line.

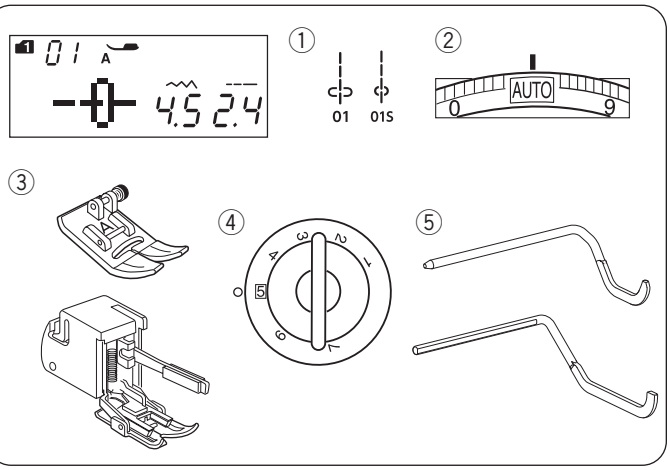

Quilting

Machine settings

① Pattern: MODE 1: 01, 01S
② Thread tension: AUTO
③ Presser foot: Zigzag foot A or Even feed foot
④ Foot pressure: 5
⑤ Quilting guide bar or Quilting guide bar (for even feed foot)

NOTE:
When sewing with the even feed foot, be sure to sew at a slow speed.

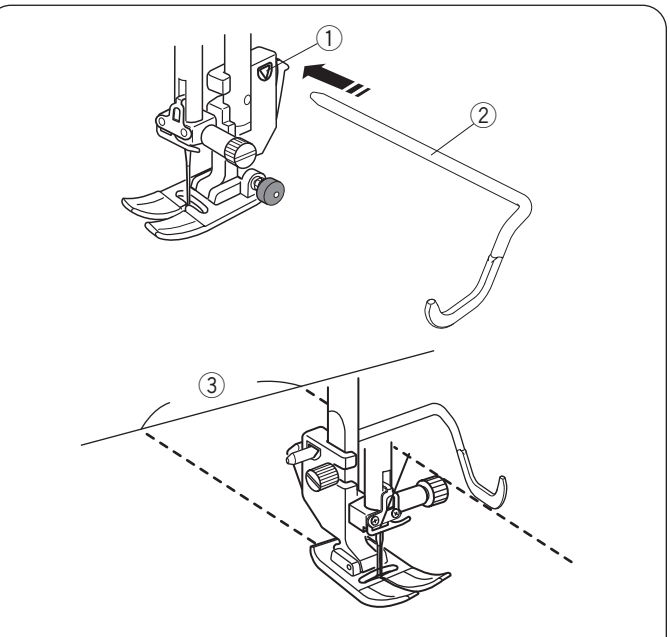

Attaching the quilting guide bar

The quilting guide bar is helpful when sewing parallel, evenly spaced rows of stitching.

Insert the quilting guide bar into the opening and slide the quilting guide bar to the position according to the desired seam spacing.

① Opening on the foot holder
② Quilting guide bar
③ Seam spacing

Sewing

Sew while tracing the previous seam with the quilting guide bar.

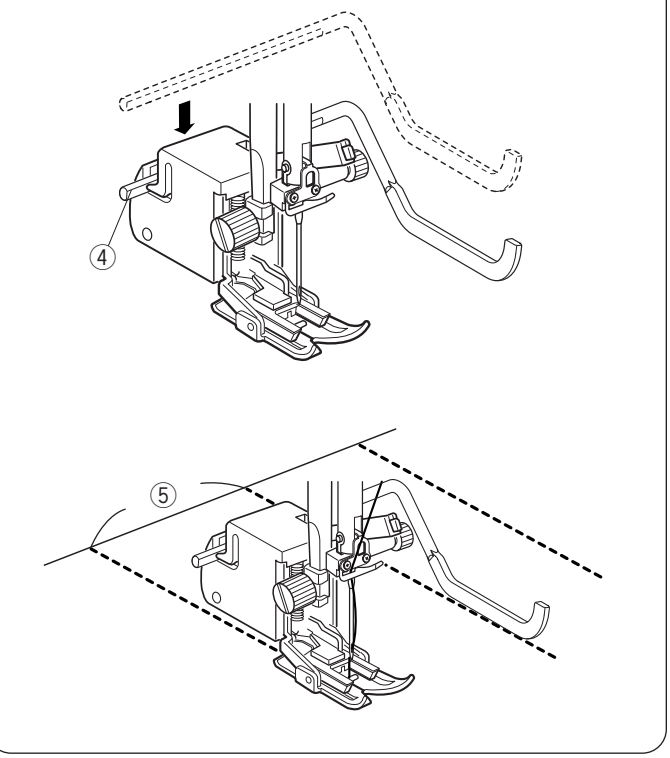

Quilting guide bar for even feed foot

Push down the quilting guide bar into the slit on the even feed foot.

④ Quilting guide bar (for even feed foot)

Slide the quilting guide bar to the right or left to match it with the seam spacing.

⑤ Seam spacing

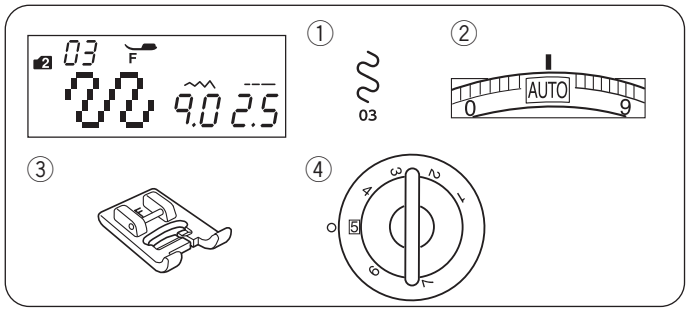

Stippling

Machine settings

① Pattern: MODE 2: 03
② Thread tension: AUTO
③ Presser foot: Satin stitch foot F
④ Foot pressure: 5

* Stitch patterns 04 05 (mode 2) can also be used.

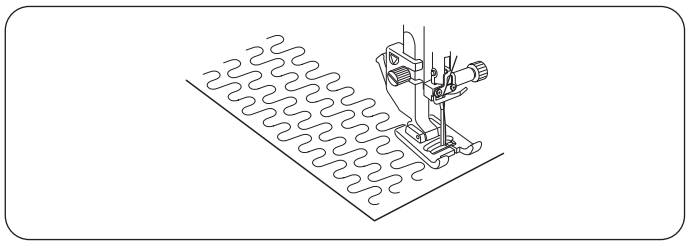

A pre-programmed stippling stitch is a fast and easy method to quilt small areas.

Place a quilt layer and sew.

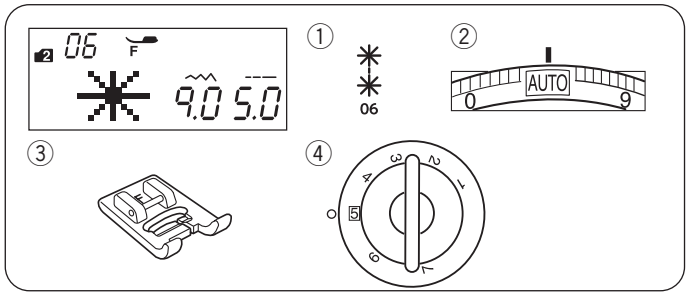

Clasp Stitches

Machine settings

① Pattern: MODE 2: 06
② Thread tension: AUTO
③ Presser foot: Satin stitch foot F
④ Foot pressure: 5

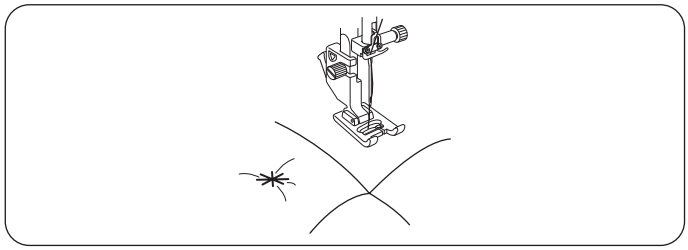

You can close quilt layers by using the clasp stitch.
Select stitch pattern 06 (mode 2). Press the memory key.
Select locking stitch (pattern 93 in mode 2). Press the memory key.
Start sewing.
The machine sews clasp stitch and locking stitch then stops automatically.

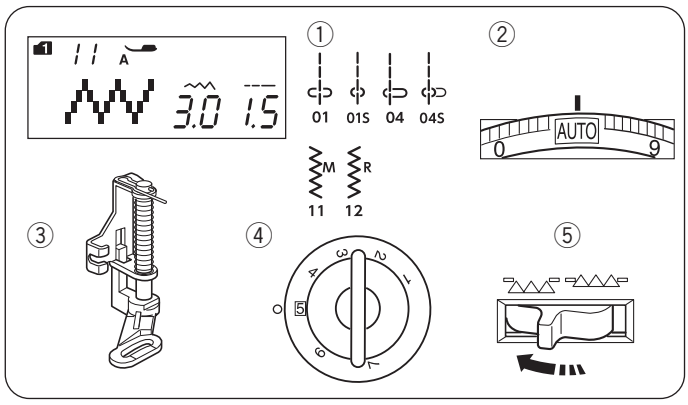

Free Motion Quilting

Machine settings

① Pattern: MODE 1: 01, 01S, 04, 04S, 11, 12
② Thread tension: AUTO
③ Presser foot: Darning foot PD-H
④ Foot pressure: 5
⑤ Feed dogs: Lowered

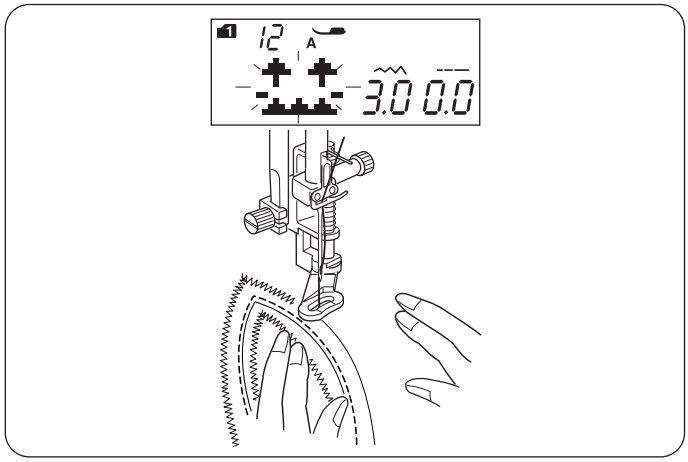

NOTE:

- A message appears when starting the machine with the feed dogs lowered.
  Start sewing again to proceed sewing.
- The purple tip needle is recommended to prevent skipped stitches.

Baste or pin the quilt layers. Draw a quilt design on the top fabric with a washable maker.
Sew at medium speed while guiding the quilt layers with your hands.
Move the quilt layers 3 mm (1/8″) or less per stitch.

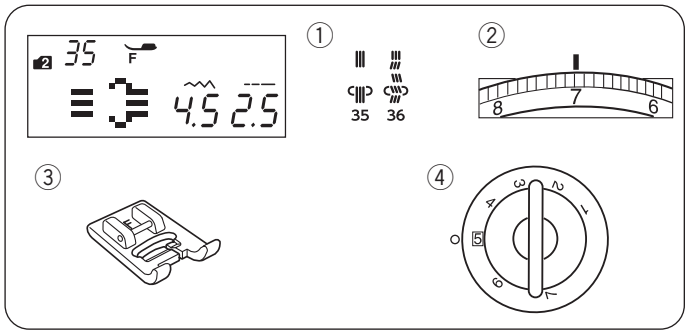

Hand-look Quilt Stitches

Machine settings

① Pattern: MODE 2: 35, 36
② Thread tension: 6-8
③ Presser foot: Satin stitch foot F
④ Foot pressure: 5

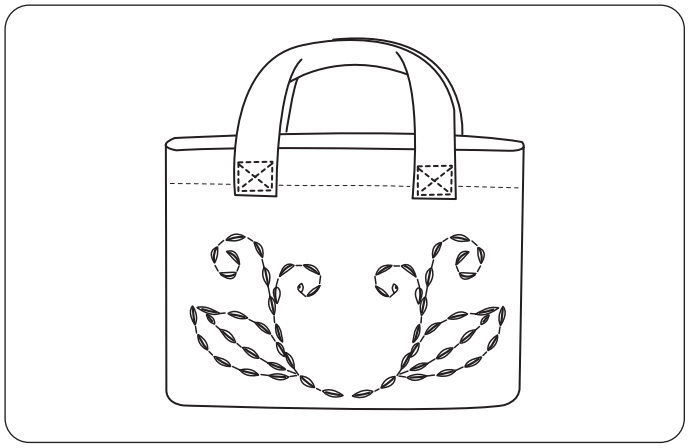

Patterns 35 and 36 (mode 2) are special stitches for quilting which look like hand sewn stitches.
Use a transparent nylon thread for the needle and ordinary sewing thread for the bobbin.
The bobbin thread is pulled up on the right side of the fabric and the stitches look as if they were sewn by hand.

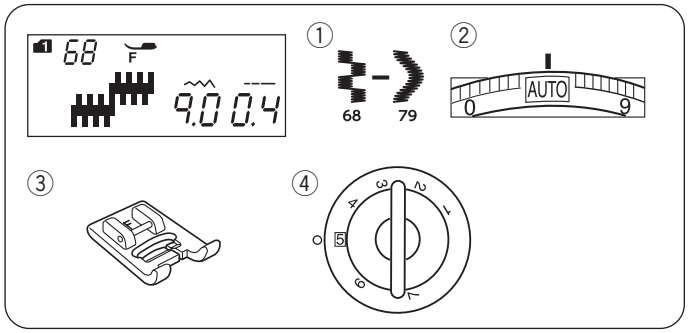

Satin Stitches

Machine settings

① Pattern: MODE 1: 68-79
② Thread tension: AUTO
③ Presser foot: Satin stitch foot F
④ Foot pressure: 5

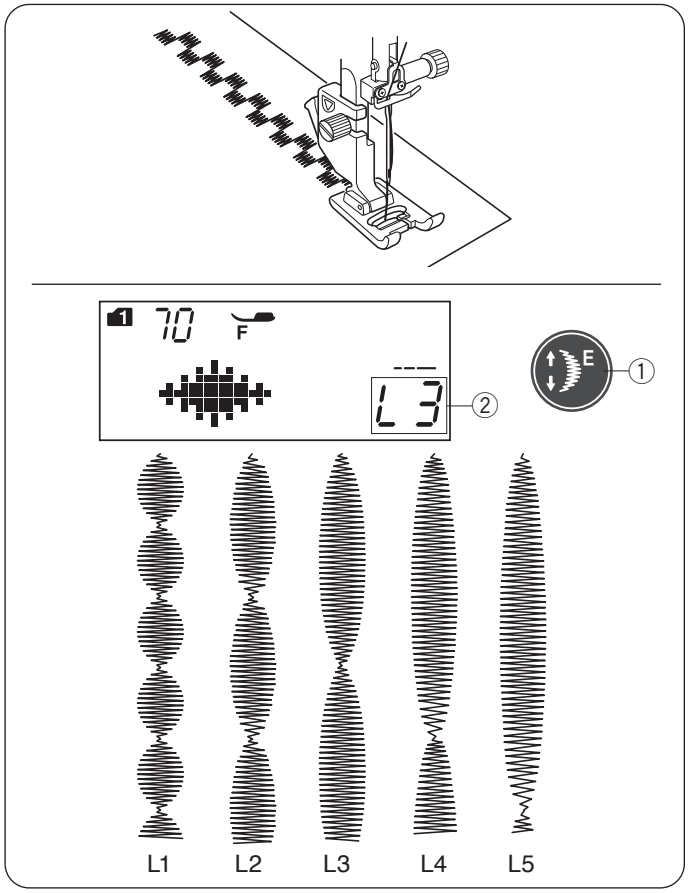

Patterns 68-79 can be elongated up to 5 times their original length while the stitch density remains the same.

Elongation ratio

Example: Pattern number 70 (mode 1)

Select pattern number 70 (mode 1).
Press the elongation key to select the desired elongation ratio.
Elongation ratio is indicated in multiples of the original pattern length; L1 (original length) to L5.

① Elongation key
② Elongation ratio

The stitch length and width can also be changed.

Mode 1

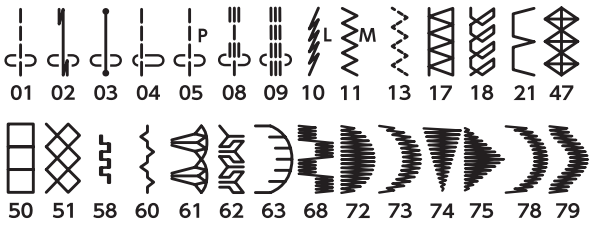

Mode 2

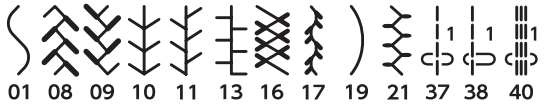



Twin Needle Sewing

The utility stitches and decorative stitches shown on the left can be sewn with a twin needle.

Replace the needle with the twin needle supplied with the standard accessories.

⚠ CAUTION:

Press the lockout key before changing the needle. Do not use twin needles other than one included in the standard accessories, otherwise the needle may hit the needle plate, foot or hook and break.

① Lockout key

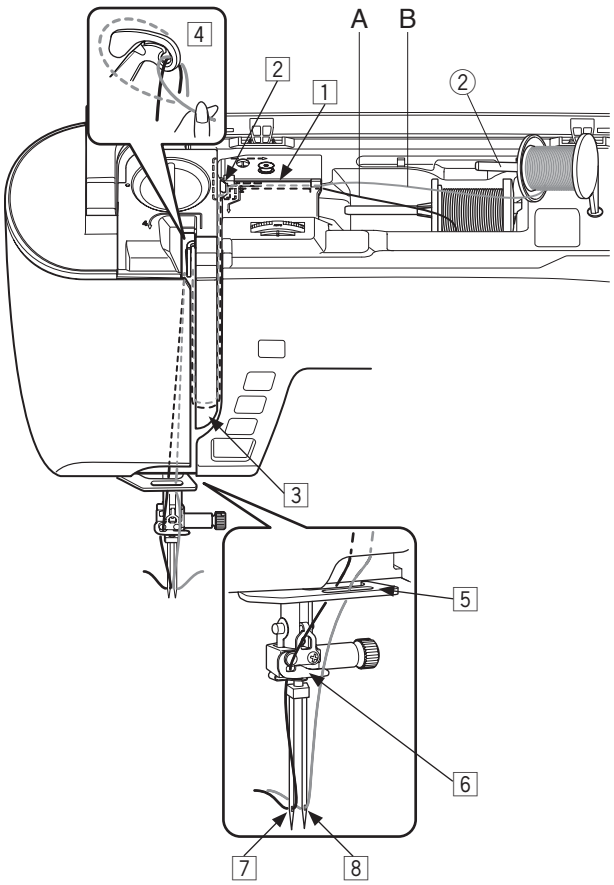

Insert the extra spool pin into the hole beside the horizontal spool pin.

Place a spool of thread on the extra spool pin and fix the spool with the spool holder.

② Extra spool pin

Draw both threads from the spools and pass them through the threading points from 1 to 4.

Slip the thread A through the needle bar thread guide 5, then press through points and 6 as 7 illustrated. Thread the thread B through the front hole of needle bar thread guide 5, then pass it through the needle hole 8.

Make sure that the two strands of thread from the spools do not get tangled.

NOTE:

- Threading from points 1 to 4 is the same as for a single needle (refer to page 21).
- The needle threader cannot be used with the twin needle.

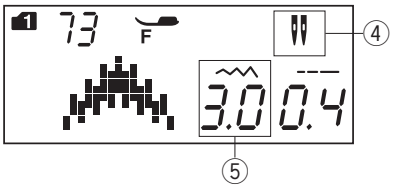



③

④

⑤



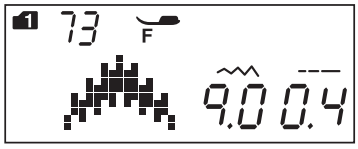



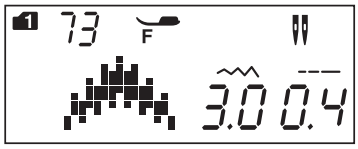





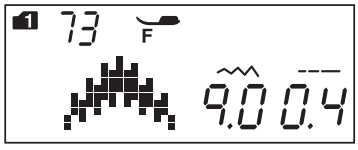

NOTE:

- When you sew patterns with the twin needle, test the stitches first before you sew on the garment.
- Use the zigzag foot A or satin stitch foot F for twin needle sewing.
- When changing the sewing direction, raise the needle and presser foot then turn the fabric.
- When you select stitch patterns not for twin needle sewing and press the twin needle key, the twin needle mark will blink on the LCD screen and the caution buzzer sound.

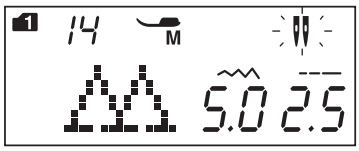

- Stitch patterns cannot be memorized in the twin needle mode.
- Use the thread cutter on the face cover when trimming threads.
- Use fine threads #60 or larger number for the twin needle sewing.

Buttonholes and specialty stitches such as darning or eyelet, and monogram cannot be selected.

③ Twin needle key
④ Twin needle icon
⑤ Maximum width (3.0)

Select the desired pattern suitable for twin needle sewing.
Press the twin needle key.

The LCD screen shows a twin needle icon and the maximum permissible stitch width is restricted to 3.0 mm. The needle drop position of straight stitches is restricted to between 3.0 and 6.0.

After twin needle sewing is finished, press the twin needle key. The twin needle icon blinks.

Replace the twin needle with a single needle.
Turn OFF and ON the power switch or press the twin needle key to return to the single stitch mode.

PROGRAMMING A PATTERN COMBINATION

Pattern Combination

Example: Programming patterns 73 and 75 (mode 1).

NOTE:
- Patterns in the different groups, letters and numbers can also be programmed.
- Check tension balance by test sewing. Manual tension adjustment may be required when sewing a pattern combination.
- Up to 50 stitch patterns combination can be memorized.
- Stitch patterns selected with direct pattern selection keys cannot be memorized (refer to page 24).

1 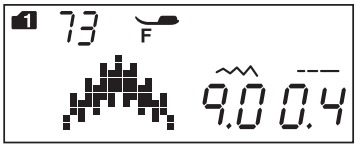

1 Select pattern 73 (mode 1).

2 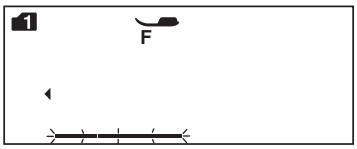



2 Press the memory key.

3 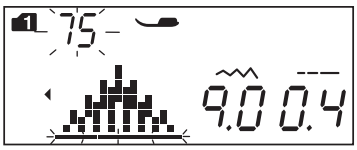

3 Select pattern 75 (mode 1).

4 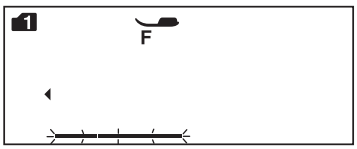



4 Press the memory key.

5 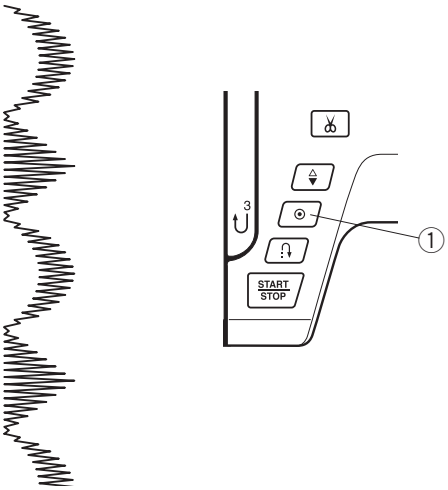

5 Start sewing. Combination of patterns 73 and 75 will be sewn continuously.

NOTE:
If you press the auto-lock button in the middle of sewing, the machine will sew to the end of the current pattern, sew locking stitches and stop automatically.
① Auto-lock button

Programming Auto-lock Stitch

Example: Programming patterns 70 (mode 1) and auto-lock stitch. The machine will sew the pattern, auto-lock stitch, and stop automatically.

1 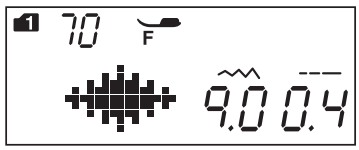

1 Select pattern 70 (mode 1).

2 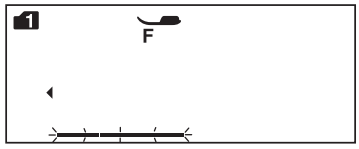



2 Press the memory key.

3 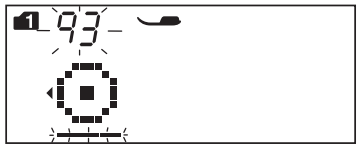



3 Select pattern 93 (mode 1).
Press the memory key.

4 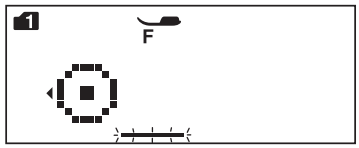

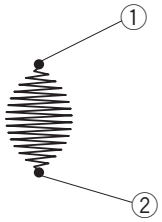

4 Start sewing. Pattern 70 and 93 (auto-lock stitch) will be sewn automatically.
② Auto-lock stitch

NOTE:
The locking stitch at the beginning ① is pre-programmed.

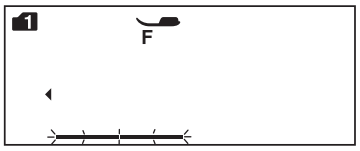

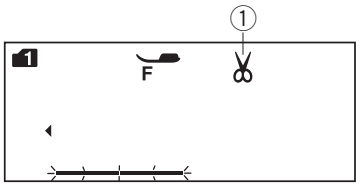

Programming Automatic Thread Cutting

To cut the threads automatically after sewing the pattern combination, press automatic thread cutting key.
The cutter sign will be indicated on the LCD screen.
Press the automatic thread cutting key again to cancel it.

① Cutter sign

1 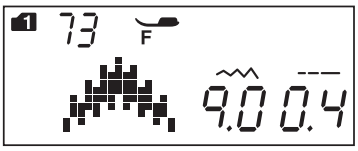

1 Select pattern 73 (mode 1).

2 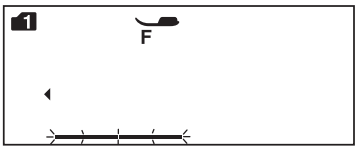



2 Press the memory key.

3 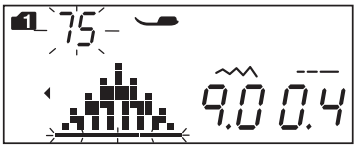

3 Select pattern 75 (mode 1).

4 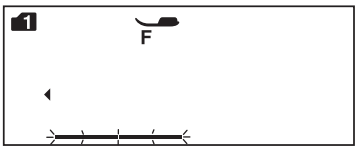



4 Press the memory key.

5

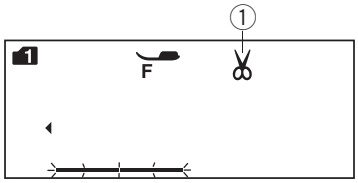

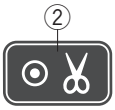

5 Press the automatic thread cutting key.
The cutter sign appears on the LCD screen.

② Automatic thread cutting key

6 

6 Start sewing.
The machine will sew the pattern combination, auto-lock stitch and cut the threads, then stop automatically.

Pattern Combination with a Mirror Image

Example: Pattern 73 (mode 1) and its mirror image

1 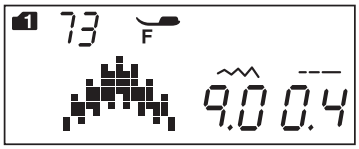

1 Select pattern 73 (mode 1).

2 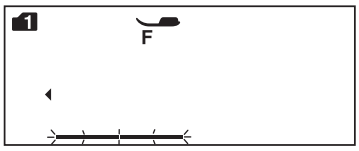


2 Press the memory key.

3 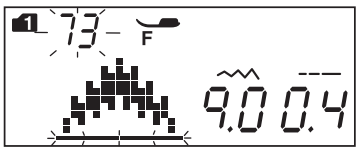

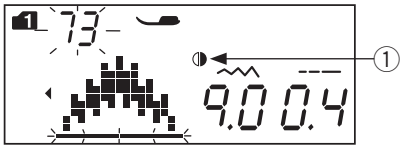

3 Select pattern 73 (mode 1).
Press the mirror image key.
The mirror sign will appear on the LCD screen.
① Mirror sign

4 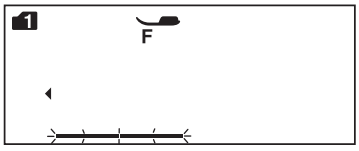


4 Press the memory key.

5 

5 Start sewing.
The machine will sew the pattern combination repeatedly.

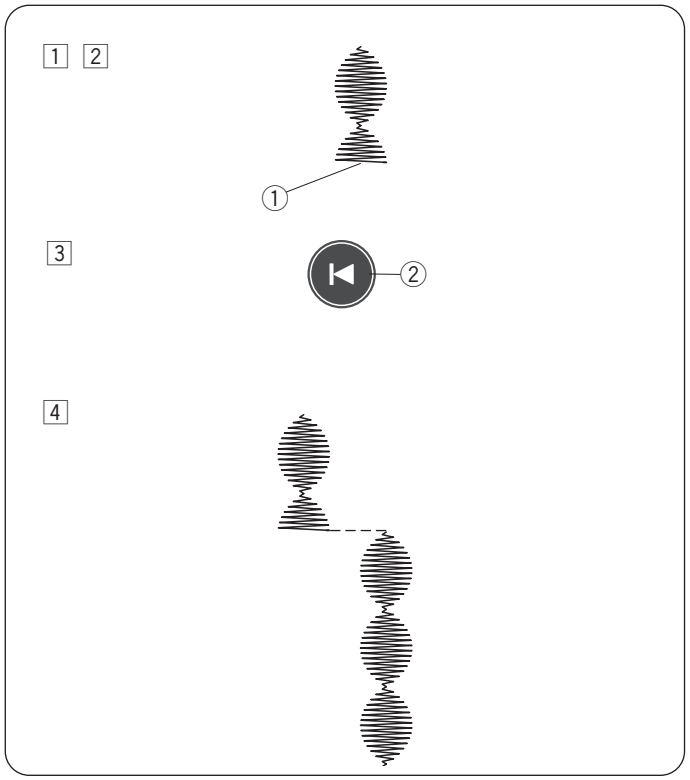

Resuming a Pattern from the Beginning

If you have to stop sewing in the middle of a pattern and wish to sew it over again, press the startover key to sew the pattern from the beginning.

Example: Pattern 70 (mode 1)

1 Select pattern 70 (mode 1). Start sewing.

2 Sewing stopped.

① Stopped position

3 Press the startover key.

② Startover key

4 Sewing starts from the beginning of the pattern.

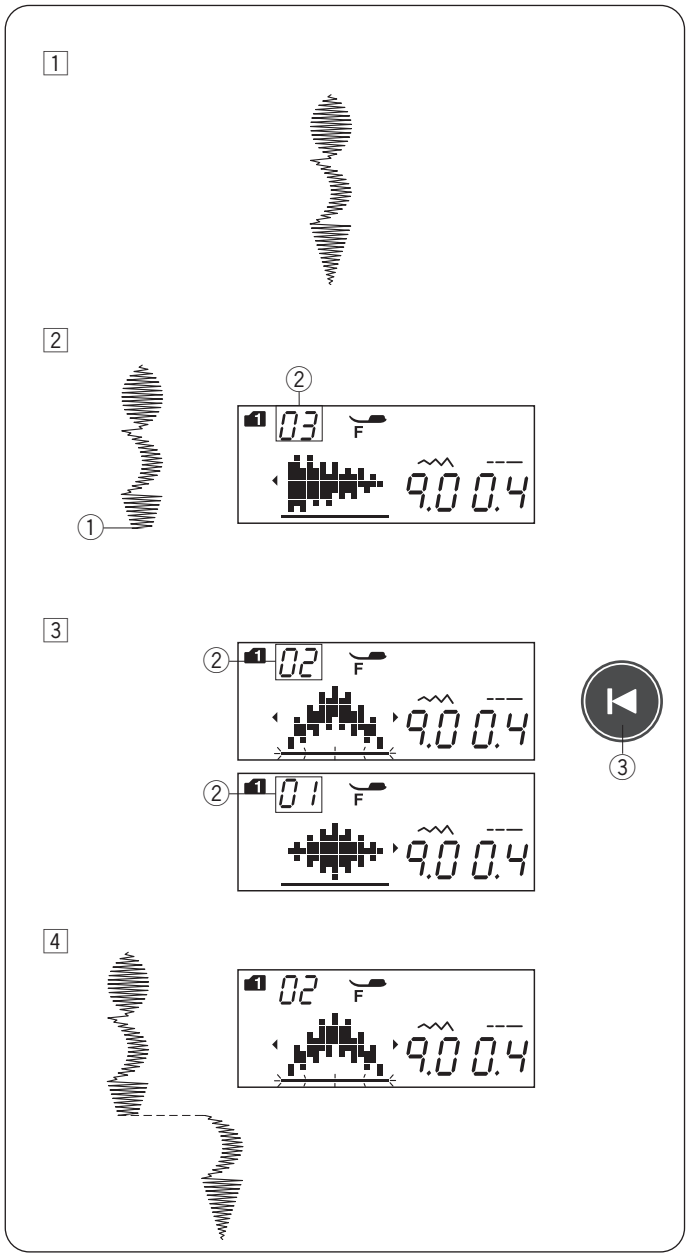

Resuming a Pattern Combination from the Beginning

If you have to stop sewing in the middle of a pattern combination and wish to start sewing again from the incomplete pattern, press the startover key to select the pattern you wish to start over from.

Example: Pattern combination 70, 73 and 74 (mode 1)

1 Program the pattern combination 70, 73 and 74 (mode 1).

Start sewing.

2 Sewing stopped. The number of sewing order appears on the LCD screen.

① Stopped position
② Sewing order

3 Press the startover key. The number will count down and the stitch image will be displayed each time you press the startover key. Select the stitch pattern you wish to start over from.

③ Startover key

4 Press the start/stop button.

Sewing starts from the number of the programmed stitch pattern.

Bridge Stitches

Stitch patterns number 37 to 41 (mode 2) are bridge stitches, which are used to insert straight stitches after a stitch pattern.

NOTE:
The bridge stitches number 39 and 41 (mode 2) cannot be selected individually.
Insert the bridge stitches after a stitch pattern.

Example: Combination of pattern 47 (mode 1) and pattern 39 (mode 2).

1 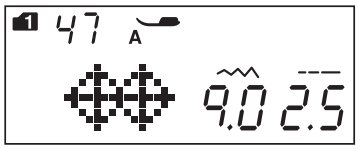

2 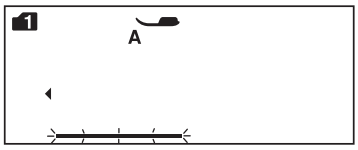


1 Select pattern 47 (mode 1).

2 Press the memory key.

3 

3 Select pattern 39 (mode 2).

4 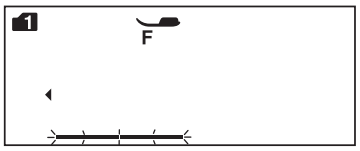


4 Press the memory key.

5 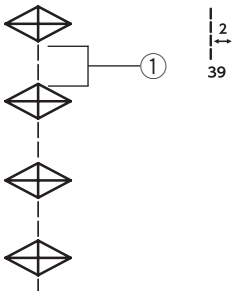

5 Start sewing.

Two counts of the straight stitch are added to pattern 47.

① Bridge stitch

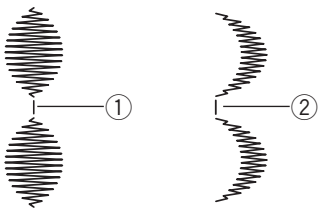

NOTE:
The number on the right of the stitch image indicates stitch counts to be inserted.
The stitch length and needle drop position of patterns 37, 38 and 40 (mode 2) are independent from those of the combined pattern.
Patterns 39 and 41 (mode 2) will inherit the stitch length and needle drop position of a previous pattern in the programmed pattern combination.

Use patterns 37 or 38 (mode 2) with satin stitches.

① Pattern 37
② Pattern 38

Use pattern 40 (mode 2) if you wish to add straight stretch stitches.

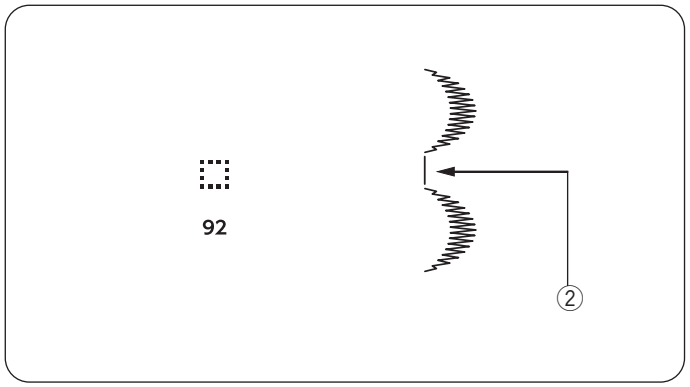

Use the stitch pattern 92 (blank space) in mode 1 or 2 if you wish to insert a space between stitch patterns.

② Blank space

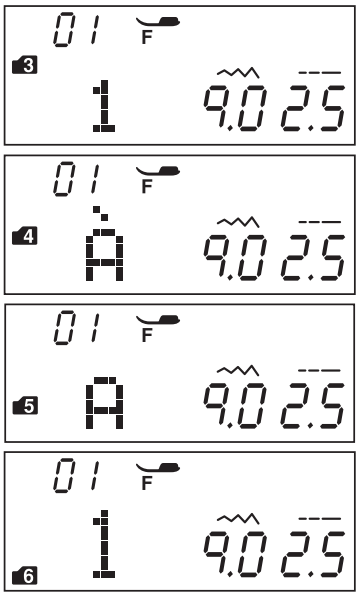

Monogramming

Selecting a character

In mode 3, 4, 5 and 6, you can program text by entering the number and alphabets.

Mode 3: Alphabets/number/symbol
Mode 4: European accented letters
Mode 5: Cyrillic letters
Mode 6: 9 mm monogram (capital letter/number only)

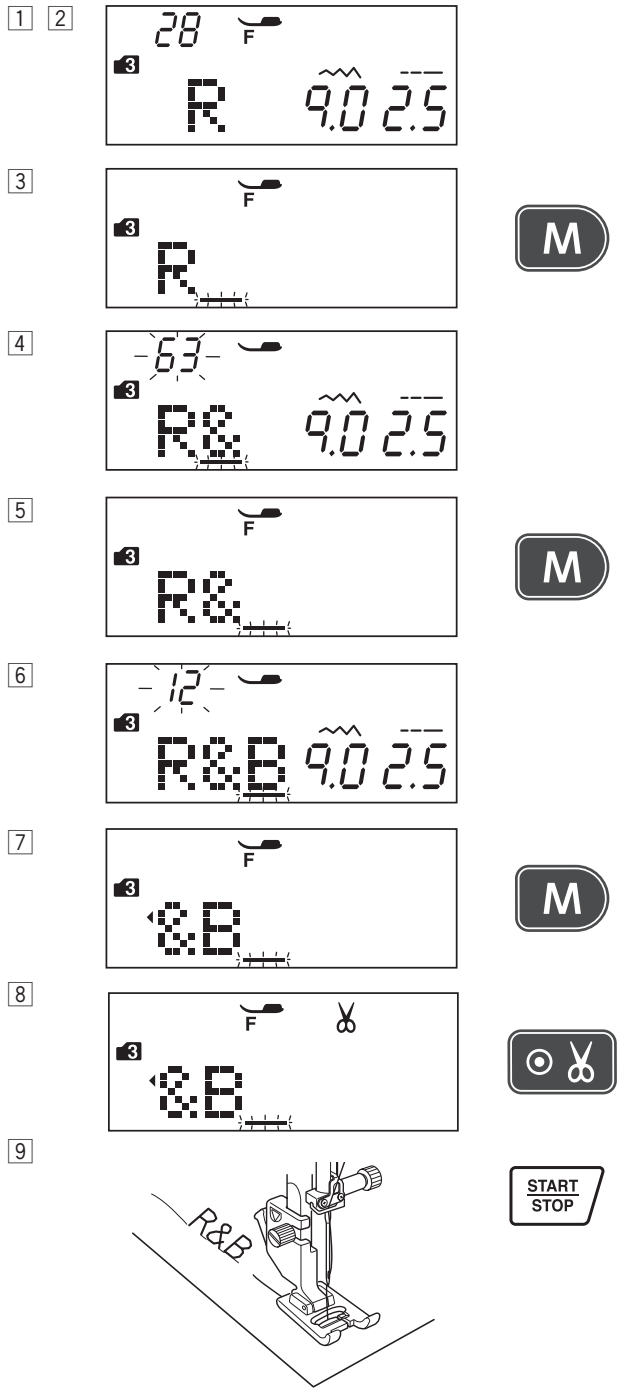

Programming a monogram

Example: To program **"R&B"**

1 Press the mode key 2 times to enter mode 3.

2 Select pattern 28.

3 Press the memory key.

4 Select pattern 63.

5 Press the memory key.

6 Select pattern 12.

7 Press the memory key.

8 Press the auto thread cutter key.
The cutter sign will appear.

9 Press the start/stop button.
The machine will sew "R&B", cut the threads and stop automatically.

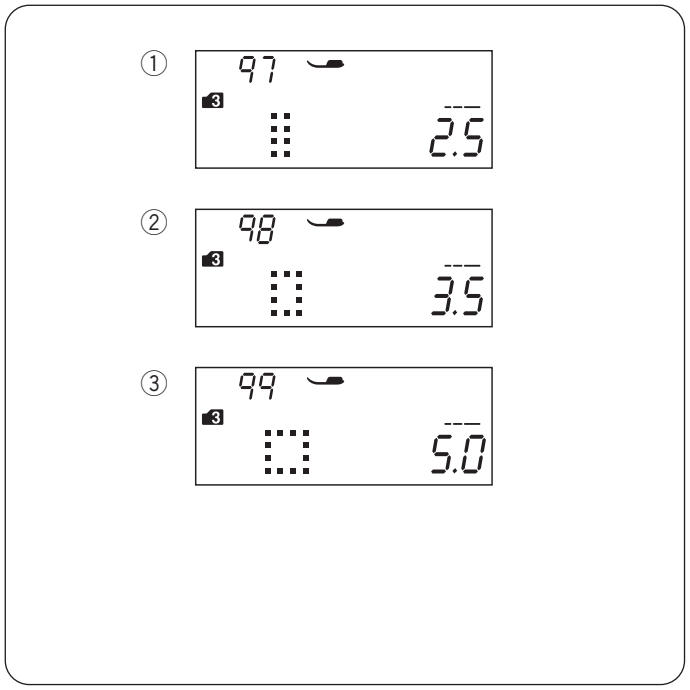

Spacing

To enter the space in monogramming, select the stitch pattern 97, 98 or 99 in mode 3, 4, 5 or 6.

① Pattern 97: Small-size space (2.5 mm)
② Pattern 98: Medium-size space (3.5 mm)
③ Pattern 99: Large-size space (5.0 mm)

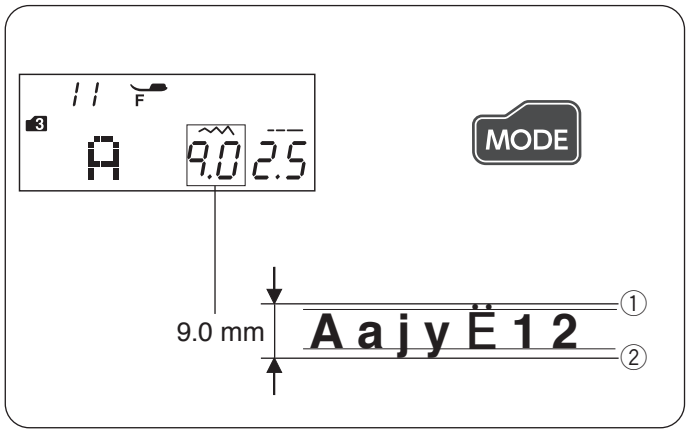

Monogram size

The stitch width of monogramming does not indicate the actual size of character. That is an overall height including before-edge and after-edge. To sew monogramming of full 9 mm height (uppercase alphabet only), press mode key 5 times to enter mode 6.

① Before-edge
② After-edge

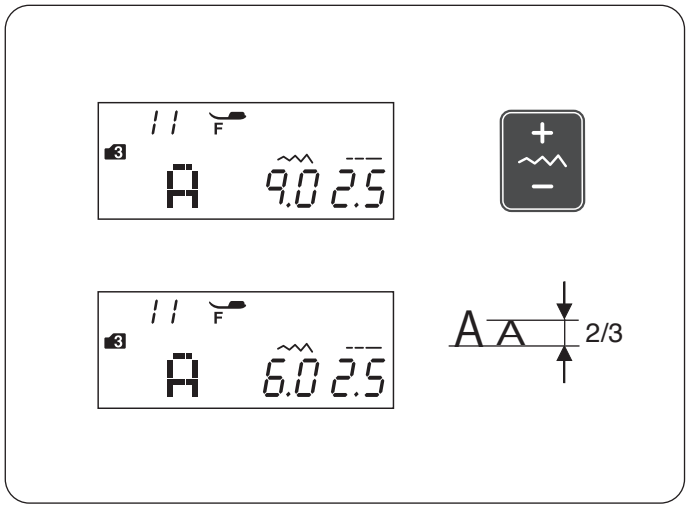

Reducing the size of letters

To reduce the height of character to approximately 2/3 of its original size, select the character with the cursor key and press " – " of the stitch width adjusting key.

NOTE:
The size of 9 mm monogram (mode 6) cannot be reduced.

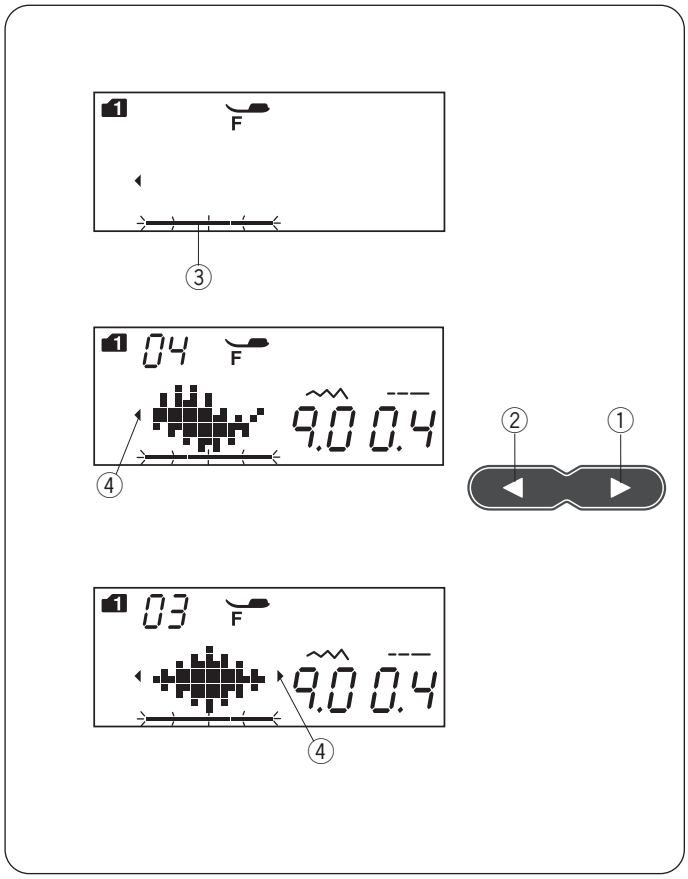

Editing a Pattern Combination

Viewing a long combination

The LCD screen only shows one pattern at a time.
If the entire combination is not displayed, press the cursor key to view the rest of the combination.

Press the right arrow " ▷ " ① on the cursor key to shift the cursor to the right.
Press the left arrow " ◁ " ② on the cursor key to shift the cursor to the left.

NOTE:
Arrow signs (◀ , ▶) ④ on the LCD screen indicate that there is the rest of the combination in that direction.

Once sewing has started, the cursor appears under the first pattern and will shift to the right as you sew.

Press the cursor key again to view the hidden patterns or to edit the pattern combination.
The cursor will blink and can be moved to the desired position.

① Right arrow
② Left arrow
③ Cursor
④ Arrow sign

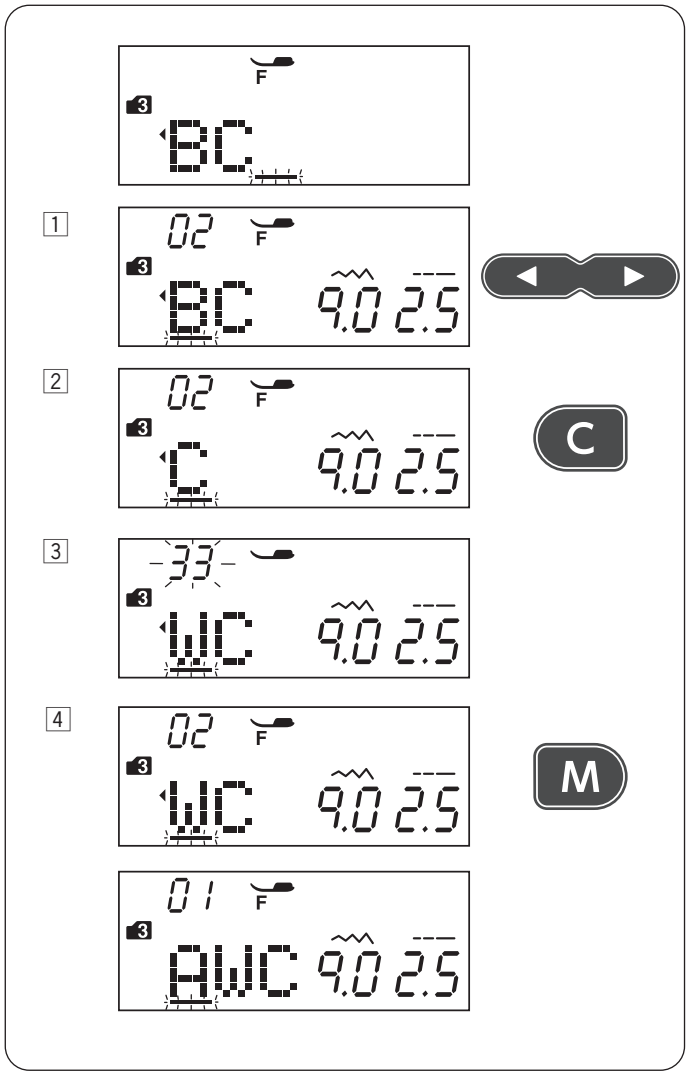

Deleting and Inserting a Pattern

Example: Deleting pattern “B” and inserting “W” from “ABC”.

1 Press the cursor key to shift the cursor under the pattern to be deleted.
Move the cursor under the pattern “B”.

2 Press the clear key.
Pattern “B” will be deleted.

3 Enter “W”.
Pattern “W” will be inserted between “A” and “C”.

4 Press the memory key to memorize the new pattern combination.

NOTE:
Pressing and holding the clear key will delete all the programmed patterns and the LCD screen will return to the display prior to programming.

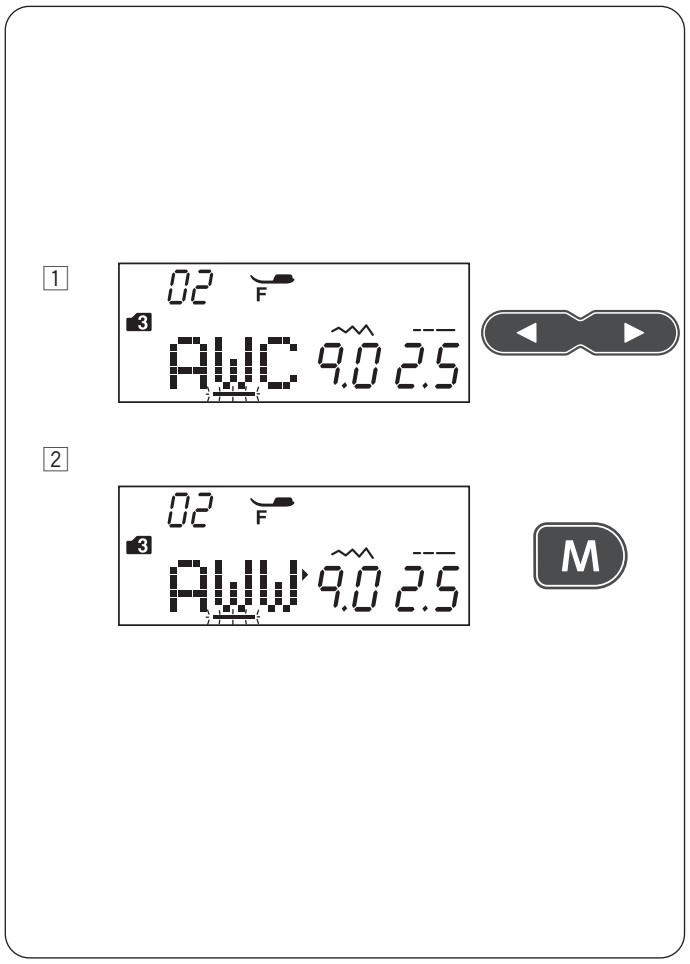

Duplicating a Pattern

Example: Duplicating a “W”.

1 Press the cursor key to shift the cursor under the pattern to be duplicated.

2 Press the memory key and “W” will be duplicated after the pattern “W”.

Uniform Stitch Adjustment

The stitch width and length of the programmed patterns can be uniformly adjusted.

Example: Adjusting the stitch width of the programmed pattern 50 (mode 2) and its mirror image.

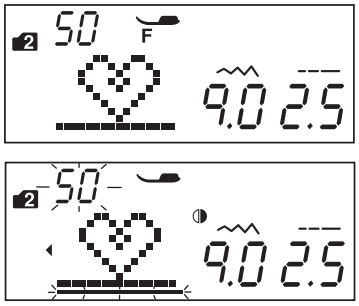

Shift the cursor to the right of the last programmed pattern.

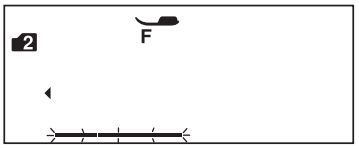

Press the stitch width adjusting key to adjust the stitch width.

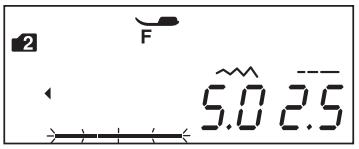



> **NOTE:**
> Stitch length can be uniformly adjusted if the programmed patterns in the same category (satin stitches or stretch stitches) have been programmed.

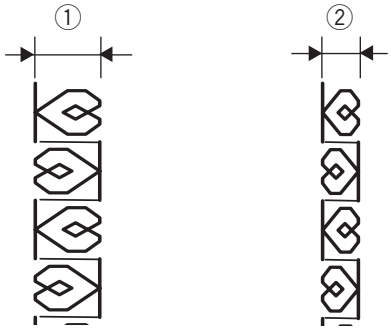

The stitch width of the programmed patterns will be adjusted uniformly.

① Original width
② Uniformly adjusted width

Unified Needle Drop Position

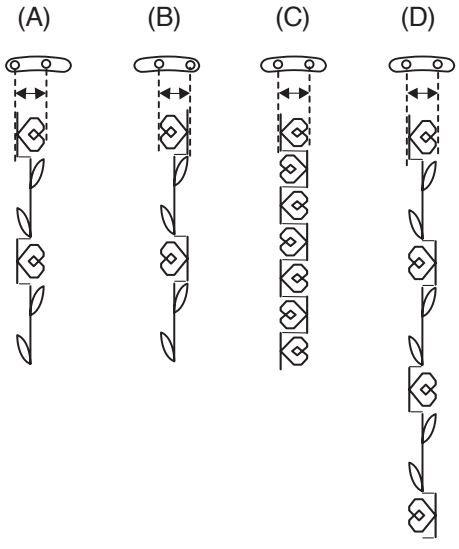

The needle drop position of the programmed patterns will vary depending on the pattern combination:

(A) Unified to the left when combining the patterns with the left needle position and the center needle position.

(B) Unified to the right when combining the patterns with the center needle position and the right needle position.

(C) Unified to the center when combining the patterns with the left needle position and the right needle position.

(D) Unified to the center when combining the patterns with the left, center and right needle positions.

Individual Stitch Adjustment

The stitch width and length can be individually adjusted for each pattern in a programmed combination.

Example: Changing the stitch width of the one pattern in the combination

1 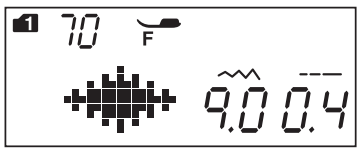



1 Select pattern 70 (mode 1).
Press the memory key.

2 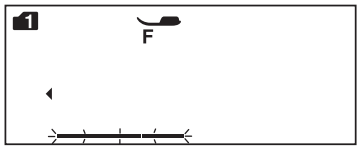



2 Press the memory key again.

3 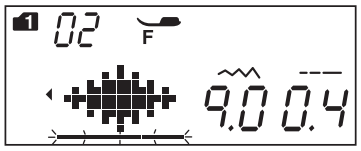



3 Press the cursor key to shift the cursor under the second pattern.

4 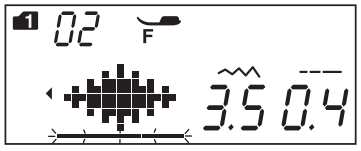



4 Press the stitch width adjusting key to adjust the width to “3.5”.

5 

5 Press the start/stop button.
The machine will sew the pattern combination.
The stitch width of the second pattern in the combination is adjusted.

NOTE:
To view the stitch settings of each pattern, shift the cursor under the desired pattern then press the stitch width or length adjusting key. The settings will be displayed at the bottom of the LCD screen.
If you press the stitch width or length adjusting key when the cursor is to the right of the last programmed pattern, individual adjustments will be cancelled and uniform adjustment will be applied.

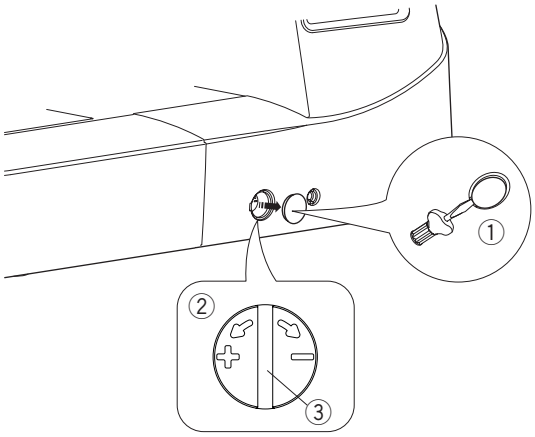

Correcting Distorted Stitch Patterns

The sewing results of the stitch patterns may vary depending upon sewing conditions, such as sewing speed, type of the fabric, number of layers, etc.
Always test sew on a scrap piece of the fabric that you wish to use.

If stretch stitch patterns, monogram or the stretch buttonhole is distorted, correct it with the feed balancing dial.

Remove the cap by using the screwdriver, etc. Make sure not to scratch the machine body with the screwdriver.

Set the feed balancing dial at the neutral position for normal sewing.

① Cap
② Feed balancing dial
③ Neutral position

NOTE:
Return the feed balancing dial to its neutral position when the sewing is finished.

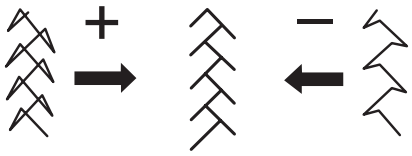

Stretch stitch pattern

Example: Pattern 08 (mode 2)
If the pattern is compressed, turn the feed balancing dial in the direction of “+”.
If the pattern is drawn out, turn the feed balancing dial in the direction of “–”.

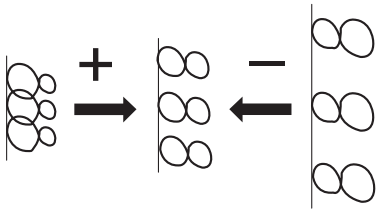

Letters and numbers

Example: Pattern 08 (mode 3)
If the pattern is compressed, turn the feed balancing dial in the direction of “+”.
If the pattern is drawn out, turn the feed balancing dial in the direction of “–”.

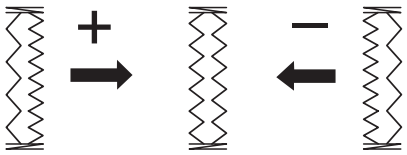

Stitch balance of the stretch buttonholes

Example: Patterns 29 (mode 1)
If the right row is denser, turn the dial in the direction of “+”.
If the left row is denser, turn the dial in the direction of “–”.

1

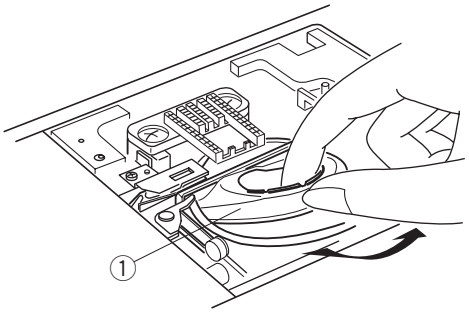

2

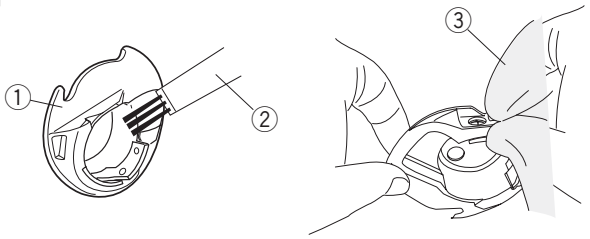

3

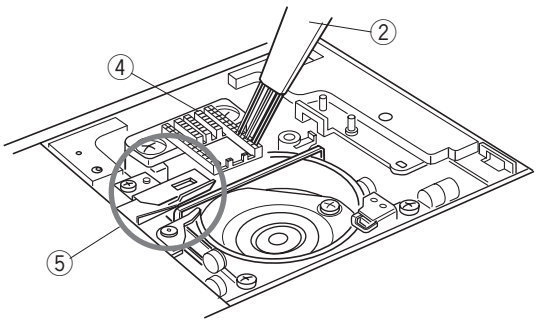

4

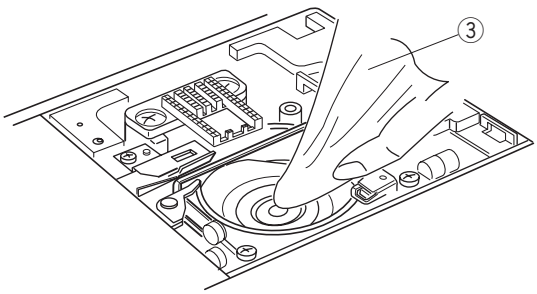

5

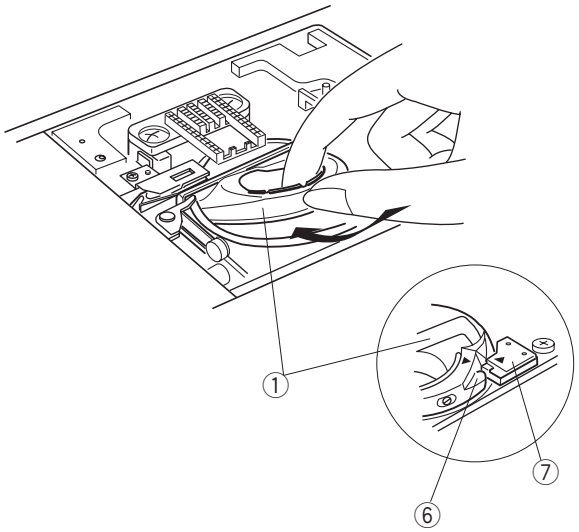

CARE AND MAINTENANCE

⚠ WARNING:

- Turn the power switch OFF and unplug the machine before cleaning.
- Do not dismantle the machine in any way other than as explained in this section.

⚠ CAUTION:

- Do not store the machine in a high-humidity area, near a heat radiator, or in direct sunlight. Store the machine in cool dry place.
- Clean the outside of the machine with a soft cloth.
- Do not use chemical solvents.

Cleaning the Hook Area

Clean the hook area at least once a month.

NOTE:
Do not dismantle the machine in any way other than as explained in this section.

1 Turn the power switch OFF and unplug the machine.
Remove the needle and presser foot.
Remove the needle plate (refer to page 16).
Take out the bobbin and bobbin holder.
① Bobbin holder

2 Clean the bobbin holder with a lint brush.
Wipe the bobbin holder both inside and outside with a soft cloth.
② Lint brush
③ Soft cloth

3 Clean the feed dogs and auto thread cutter device with the lint brush.
④ Feed dogs
⑤ Auto thread cutter device

4 Clean the hook race with a soft cloth.
③ Soft cloth

5 Insert the bobbin holder so that the knob fits next to the stopper in the hook race.
Attach the needle plate, presser foot and needle.
Insert the bobbin.
⑥ Knob
⑦ Stopper

Cleaning the Inside of the Thread Guide

Clean the inside of the thread guide plate under the top cover at least once a month.

1 Remove the needle thread and remove the thread guide plate by pulling it up.

① Thread guide plate

1

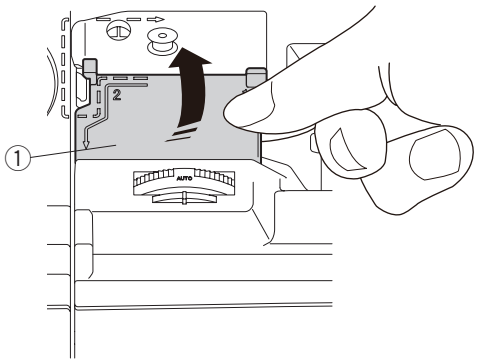

2 Remove lint and dust from the brush on the underside of the thread guide plate using a lint brush.

② Brush on the thread guide plate

2

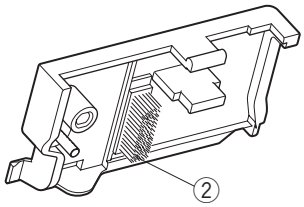

3 Clean the area around and under the pre-tension leaf with the lint brush.

③ Pre-tension leaf

④ Lint brush

3

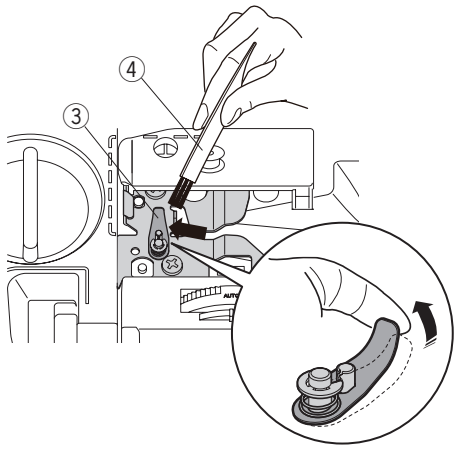

NOTE:
Hold the tip of the pre-tension leaf softly and brush out the dust.

4 Set the thread guide plate on the machine, inserting the tenons into the slots. Push the thread guide plate down to snap it in place.

⑤ Tenon

4

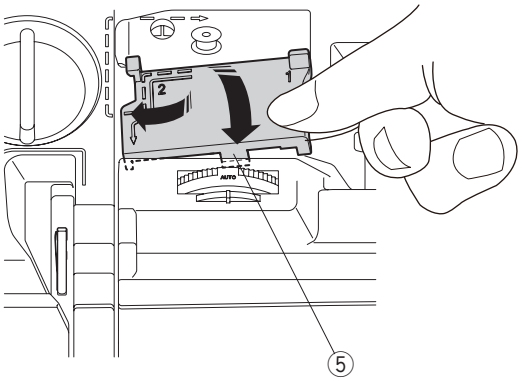

Problems and Warning Signals

If a buzzer sounds and the LCD screen shows a warning sign, follow the guidance below.

Warning Sign	Cause	Try this
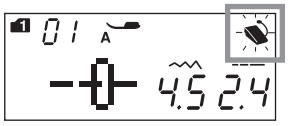	1. The start/stop button is pressed with the foot control connected. 2. The foot control is out of order (the foot control sign keeps blinking).	Disconnect the foot control. Contact the service center or the store from whom the machine was purchased.
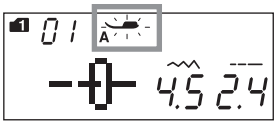	The machine is started without lowering the presser foot. The machine will stop if the presser foot is raised while sewing.	Lower the presser foot and start the machine. Lower the presser foot and start the machine again.
	The bobbin winder spindle is shifted to the right.	Shift the bobbin winder spindle to the left for stitching.
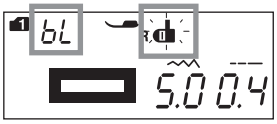	The machine will stop if the buttonhole is sewn without lowering the buttonhole lever.	Lower the buttonhole lever and start the machine again.
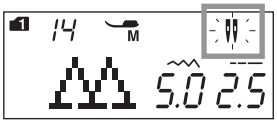	The twin needle key is pressed when a pattern unsuitable for twin needle sewing has been selected.	Select the pattern suitable for twin needle sewing.
	The twin needle key is pressed when the twin needle sign is indicated on the LCD screen.	Replace the twin needle with a single needle and press the twin needle key.
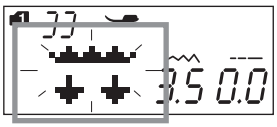	The machine is started without lowering the feed dogs with button sewing selected.	Lower the feed dogs.
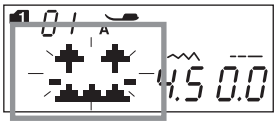	The machine is started with the feed dogs lowered.	Raise the feed dogs.
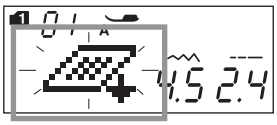	The machine is started without the needle plate. The machine is started when the straight stitch needle plate is attached and a pattern that cannot be used for the needle plate has been selected.	Attach the needle plate. Replace the needle plate.
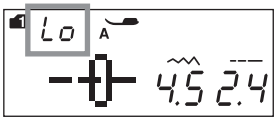	The machine is started after halting due to overload.	Wait for at least 15 seconds to restart. Remove tangled threads around take-up lever, hook race and thread cutter device.

Warning Sign	Cause	Try this
	The selected stitch pattern cannot be flipped.	Select the other stitch pattern for a mirror image (refer to page 73).
(E1-E7) 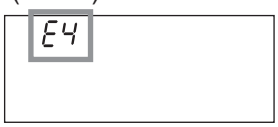	The machine does not work properly due to a problem in the control circuit.	Contact the service center or the store from whom the machine was purchased.

Audible Signal	The Buzzer sounds when:
pip	Normal operation.
pip-pip-pip	Invalid operation or malfunction.
peep	E1-E7 error occurred.
pip pi-pi-pi-peep	Buttonhole is completed.

Troubleshooting

Condition	Cause	Reference
The needle thread breaks	1. The needle thread is not threaded properly. 2. The needle thread tension is too tight. 3. The needle is bent or blunt. 4. The needle is incorrectly inserted. 5. The needle thread is not set under the presser foot when start sewing. 6. The fabric is moved too fast when stitching free motion quilting. 7. The thread is tangled around the spool.	Page 21 Page 13 Page 17 Page 17 Page 29 Page 66 Use the spool holder.
The bobbin thread breaks	1. The bobbin thread is not threaded properly in the bobbin holder. 2. Lint has collected in the bobbin holder. 3. The bobbin is damaged and does not turn smoothly.	Page 20 Page 84 Change the bobbin.
The needle breaks	1. The needle is incorrectly inserted. 2. The needle clamp screw is loose. 3. The needle is too fine for the fabric being used. 4. An inappropriate presser foot is used.	Page 17 Page 17 Page 17 Use the correct foot.
Skipped stitches	1. The needle is incorrectly inserted, bent or blunt. 2. The needle and/or threads are not suitable for the work being sewn. 3. A blue tip needle is not being used for sewing stretch, very fine fabrics and synthetics. 4. The needle thread is not threaded properly. 5. A poor quality needle is used.	Page 17 Page 17 Page 17 Page 21 Change the needle.
Seam puckering	1. The needle thread tension is too tight. 2. The needle thread is not threaded properly. 3. The needle is too heavy for the fabric being sewn. 4. The stitch length is too long for the fabric. 5. The foot pressure is not adjusted properly. 6. A stabilizer is not used when sewing very fine fabrics.	Page 13 Page 21 Page 17 Make stitch shorter. Page 12 Apply a stabilizer.
The fabric is not feeding smoothly	1. The feed dogs are packed with lint. 2. The stitches are too fine. 3. The feed dogs are not raised after ”drop feed” sewing.	Page 84 Make stitch longer. Page 12
Loops on the seams	1. The needle thread tension is too loose. 2. The needle is too thick or too fine for the fabric.	Page 13 Page 17
The machine does not work	1. The machine is not plugged in or foot control is not connected. 2. Thread has been caught in the hook race. 3. The presser foot is not lowered.	Page 7 Page 84 Page 11
Buttonhole sewing is not sewn properly	1. The stitch density is not suitable for the fabric being sewn. 2. The interfacing has not been used for the stretch or synthetic fabric. 3. The buttonhole lever is not lowered.	Page 49 Apply an interfacing. Page 47
The machine is noisy	1. Thread has been caught in the hook race. 2. Lint has built up in the hook race or bobbin holder.	Page 84 Page 84
Layers shift	1. The foot pressure is not suitable for fabrics being sewn.	Page 12
Auto thread cutting failed	1. Thread is too thick for the auto thread cutting. 2. Threads have been caught in the thread cutter mechanism.	Page 30 Page 84
The stitch pattern cannot be selected	1. The straight stitch needle plate is attached to the machine. 2. The stitch pattern is 39 or 41 in mode 2 (bridge stitches).	Page 32 Page 75
The needle thread appears on the wrong side of the fabric when the stitch width value is larger than “7.0”	1. Thread tension is not balanced.	Page 13

It is not abnormal for a faint humming sound to be heard from the internal motors.
The LCD screen and function key area may become warm after several hours of continuous use.

Stitch Chart

Straight stitch needle plate

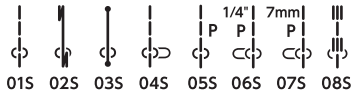

Mode 1

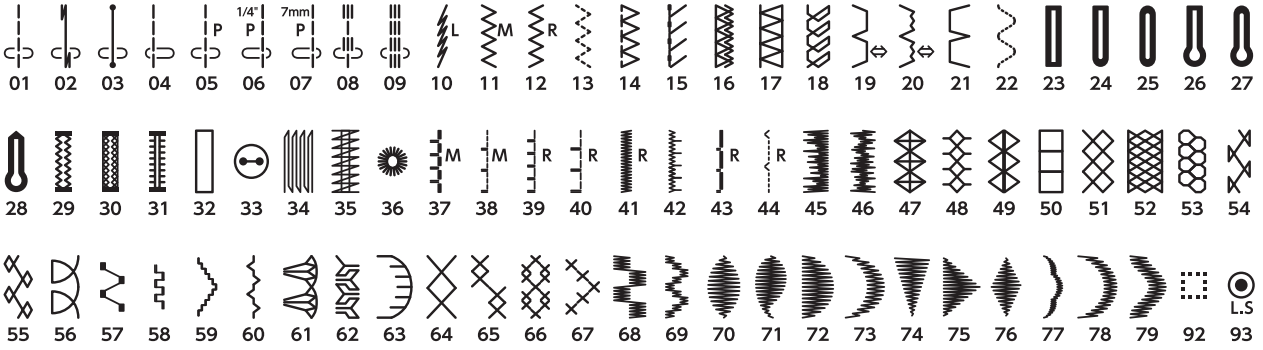

Mode 2

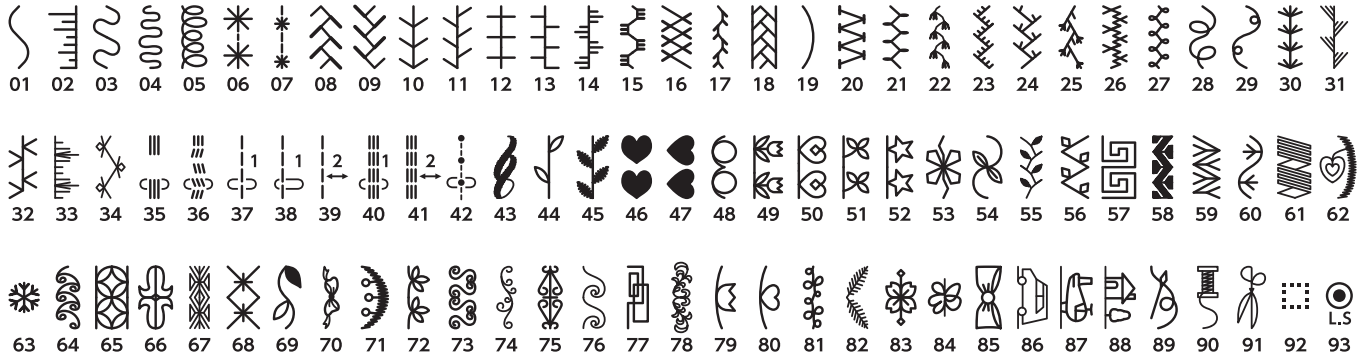

Mode 3

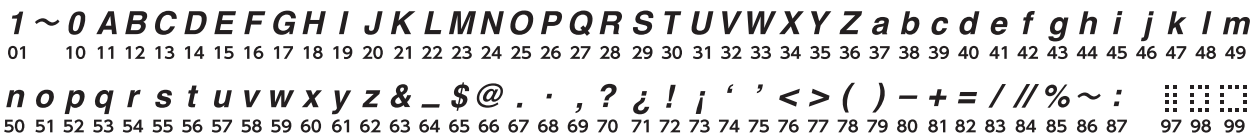

Mode 4

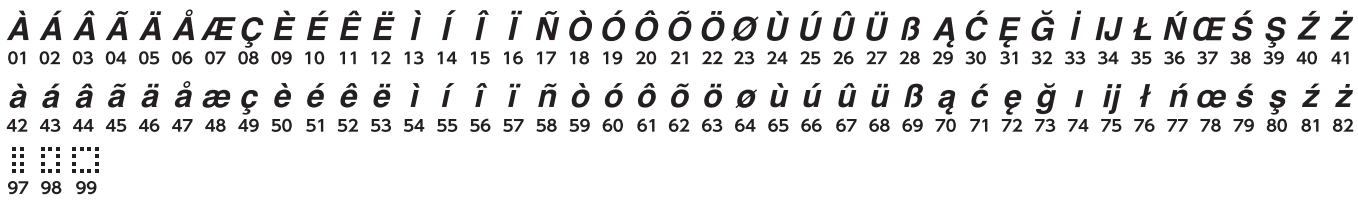

Mode 5



Mode 6

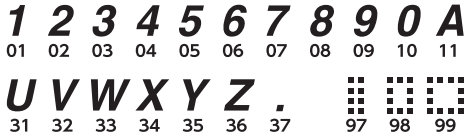

EC DECLARATION OF CONFORMITY

Manufacturer: JANOME Corporation
Address: 1463 Hazama-machi, Hachioji, Tokyo 193-0941, Japan

This machine complies with the following regulations:

EN 60335-1: 2012 ; A11 ; A13 ; A1 ; A14 ; A2 ; A15 ; A16
EN 60335-2-28: 2003 ; A1 ; A11
EN 62233: 2008
EN 55014-1: 2021
EN 55014-2: 2021
EN 61000-3-2: 2019 ; A1
EN 61000-3-3: 2013 ; A1 ; A2

This page is left intentionally blank

This page is left intentionally blank